6

6.1

interior equipment for kitchens and dressing rooms

Strong	6.5 — 6.10
Larder unit	6.5
Corner solutions	6.6 — 6.8
Bottom baskets	6.8
Baskets for 150 mm cabinet body, side pull-out frame	6.9
Bar consoles	6.10
Kesseböhmer	6.11 — 6.40
Convoy Lavido larder unit	6.11 — 6.12
Dispensa larder unit	6.12 — 6.15
Youboxx for Dispensa, Tandem	6.17 — 6.18
Tandem Side, Tandem II. larder unit	6.19 — 6.22
Corner solutions	6.23 — 6.27
Baskets for 150 mm	6.28
Dispensa Junior III., Cooking agent	6.29
Comfort side frame	6.30 — 6.32
Dispensa Junior Slim	6.33 — 6.34
Inner drawers	6.35
iMove	6.36
TurnMotion II	6.37
TopFlex, Linero MosaiQ	6.38
YouK	6.39 — 6.40
Vibo	6.41 — 6.59
Larder unit	6.42 — 6.44
Corner solutions	6.47 — 6.50
Side baskets for tall cabinet body	6.51 — 6.52
Side baskets for 150 mm cabinet body	6.53 — 6.56
Bottom baskets	6.57 — 6.58
Hinge system	6.59
Wardrobe system	6.60 — 6.74
Vibo	6.60 — 6.63
Frames, baskets, shoe racks	6.62
Pull down wardrobe rail	6.63
Strong	6.64 — 6.74
Tie, belt and trouser pull-out hangers	6.64
Pull-out baskets, shoe racks, shelves	6.65 — 6.70
Wardrobe rails and accessories	6.71 — 6.74
Hettich	6.75 — 6.80
Pull down wardrobe rails	6.75
Wardrobe rails, pull-out hangers	6.76 — 6.77

Larder units

Strong 6.5

Kesseböhmer 6.11–6.22

Vibo 6.42–6.44

Corner solutions

Strong 6.6 – 6.8

Kesseböhmer 6.23–6.27

Vibo 6.45–6.50

Baskets with side runner (for cabinet body 150–300 mm)

Strong 6.9

Kesseböhmer 6.28

Vibo 6.51–6.56

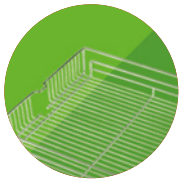

Baskets with bottom runner (for 300–600 mm cabinet body)

Strong 6.8

Kesseböhmer 6.29–6.34

Vibo 6.57–6.58

Hinge system and other accessories

larder unit

Larder unit, chrome baskets

code	cabinet body width (mm)	width (mm)	internal height incl. the slide (mm)	number of baskets
398654	200	150	1220–1520	4
398655			1520–1850	5
398656			1920–2250	6
398657	300	240	1220–1520	4
398658			1520–1850	5
398659			1920–2250	6
398660	400	345	1220–1520	4
398661			1520–1850	5
398662			1920–2250	6
398663	450	395	1220–1520	4
398665			1520–1850	5
398666			1920–2250	6

- set including baskets and front holders
- slide with damping with load capacity 80 kg
- for the number of baskets in the set, see the table
- minimal depth 540 mm

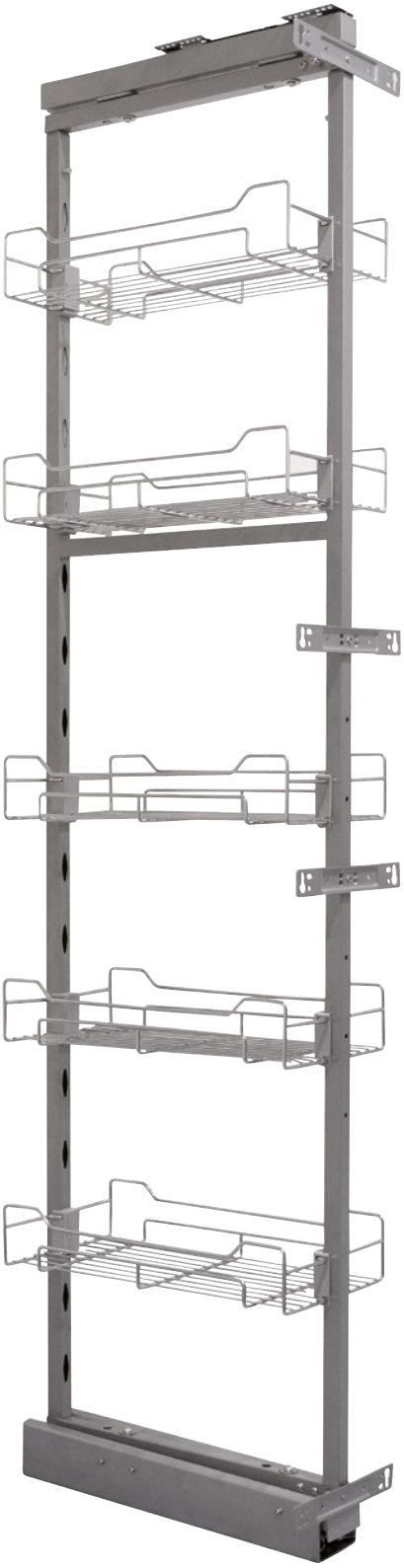

Larder unit, dark grey baskets

code	cabinet body width (mm)	width (mm)	internal height incl. the slide (mm)	number of baskets
407299	200	150	1220–1520	4
407300			1520–1850	5
407301			1920–2250	6
401645	300	240	1220–1520	4
401646			1520–1850	5
401647			1920–2250	6
401648	400	345	1220–1520	4
401649			1520–1850	5
401650			1920–2250	6
401651	450	395	1220–1520	4
401652			1520–1850	5
401653			1920–2250	6

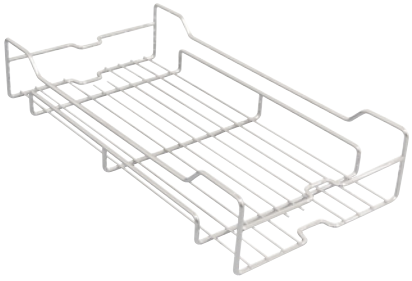

Mechanism with baskets

code	min. cabinet body width (mm)	min. depth (mm)	description
398677	900	520	right-left

- with soft closing
- minimum door width 400 mm

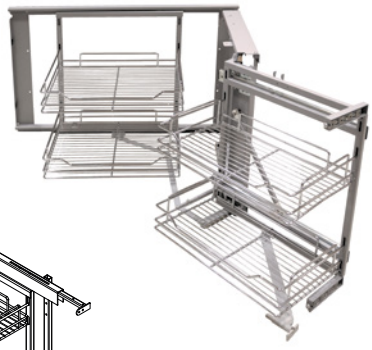

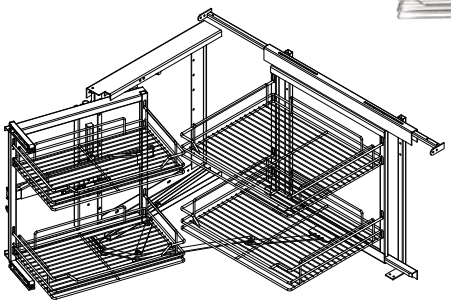

load capacity 4 × 5 (kg)

Mechanism with baskets

with the possibility of pulling out both outer and inner parts

code	min. cabinet body width (mm)	min. depth (mm)	height (mm)
335233	900	540	610

- right-left
- a solution allowing pulling out of both halves of the mechanism
- the mechanism opens independently of the door
- minimum door width 450 mm
- blocking of the open position when pulled out to a side (to prevent collision with the cabinet body)

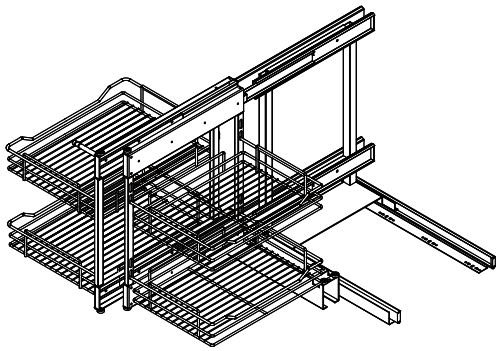

corner solutions

Carousels

1/2 circle without a mounting rod

code	colour	cabinet body (mm)	diameter (mm)	height (mm)
229371	chrome	800–900	728	73

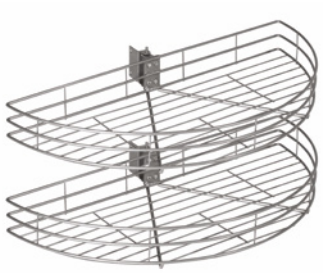

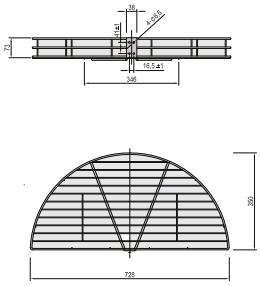

1/2 circle with a mounting rod

code	colour	cabinet body (mm)	diameter (mm)	height (mm)
229372	chrome	800–900	739	600–900

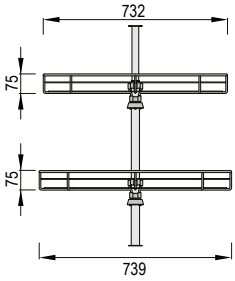

3/4 circle with a mounting rod

code	colour	cabinet body (mm)	basket diameter 1 (mm)	basket diameter 2 (mm)	height (mm)
229373	chrome	800–900	710	650	600–900
349433		900–1000	810	750	

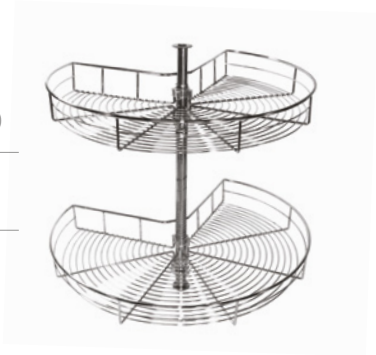

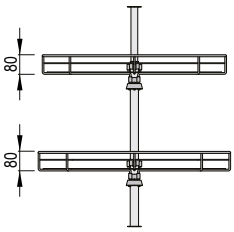

4/4 circle with a mounting rod

code	colour	cabinet body (mm)	diameter (mm)	height (mm)
229374	chrome	750–900	700	600–900

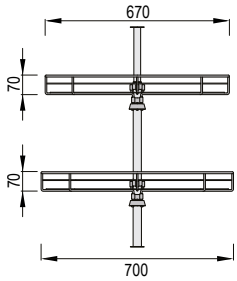

corner solutions, bottom basket

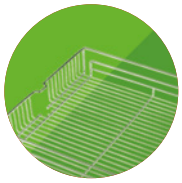

N Corner shelves

code	description	cabinet body width (mm)	cabinet body height (mm)	depth (mm)	doors (mm)	base colour
398679	left	900	680	535	426	white
398678	right					
406131	left					grey
406132	right					

Right option

Bottom double basket

cabinet body (mm)	width (mm)	depth (mm)	height (mm)	type of slide
300	260	455	490	346602
400	360			346603

baskets for 150 mm cabinet body, side pull-out frame

Baskets for 150 and 200 mm cabinet body

Options with ball bearing slides

code	description	cabinet body (mm)	width (mm)	depth (mm)	height (mm)
403253	with soft closing	150	100	452	485
403254	with soft closing	200	150	452	485
402283	push	150	100	452	485
402284	push	200	150	452	485
402285	without soft closing	150	100	452	485
402286	without soft closing	200	150	452	485

- side mounting
- right-left

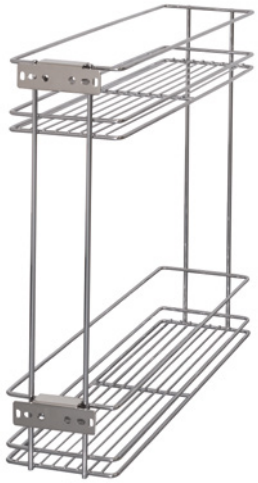

Options with concealed slide with soft closing

code	version	cabinet body (mm)	width (mm)	depth (mm)
360140	right	150	100	475
360141	left	150	150	475
360142	right	200	100	475
360144	left	200	150	475

Side frame

code	cabinet body (mm)	width (mm)	depth (mm)	height (mm)
398685	200	130	470	542
398686	250	180	470	542
398687	300	230	470	542

- side mounting
- right-left
- ball bearing full extension slide with soft closing
- supplied with 2 chrome baskets

bar counter consoles

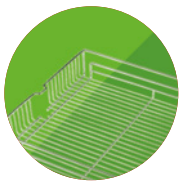

Upright console, stainless steel

code	description	height (mm)	ø (mm)	surface treatment
335301	round	200	40	stainless steel
335280	square			stainless steel

Inclined console, stainless steel

code	description	height (mm)	ø (mm)	surface treatment
335281	round	200	40	stainless steel
335279	square			stainless steel

Angled console, stainless steel

code	description	height (mm)	ø (mm)	surface treatment
335302	round	200	30	stainless steel
335304	square			stainless steel

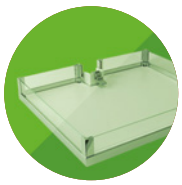

Convoy Lavido larder unit

KESSEBÖHMER

Convoy Lavido

- pull-out larder unit hidden behind the door opened in the usual way
- easy mounting
- simple variable setting of shelves in frame space
- through the glass sides, it is easy to keep track even of the things lying on the bottom
- use eTouch for handleless, electrically operated opening

Frame including front stabilizer

code	Kesseböhmer	clear inside height (mm)	top compartment (mm)	clear height of the frame (mm)
179595	002361	1100–1199	285–384	730
179600	002366	1600–1699	285–384	1230
179605	002371	2100–2199	285–384	1730

Pull-out

code	Kesseböhmer	load capacity (kg)	depth (mm)
179607	002373	130	470

Complete set of shelves

Glass sides plus handle (white base)

code	Kesseböhmer	cabinet body (mm)	width (mm)	depth (mm)	quantity (pcs)
179612	280434	500	450	470	4
179613	280438	500	450	470	5
179614	280435	600	550	470	4
179615	280439	600	550	470	5

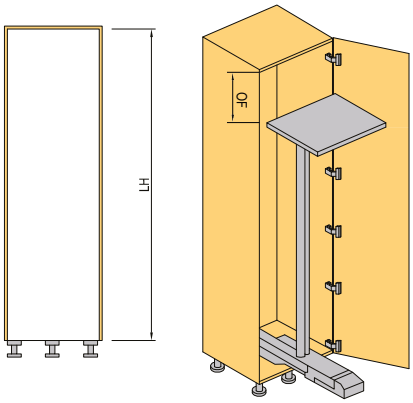

ACCESSORIES

eTouch

code	Kesseböhmer	description
229278	002400	handleless opening mechanism

Assembly manual is available on Démos24Plus portal (www.demos-trade.com) and is always packed with the product.

KESSEBÖHMER

Convoy Lavido larder unit

Dispensa larder unit

KESSEBÖHMER

Dispensa

- for cabinet body heights 900–2200 mm
- roll runner slide with damping with load capacity 100 kg
- Arena baskets with AntiSlip base surface preventing slipping
- the baskets hang on the hooks on the frame
- use eTouch for handleless, electrically operated opening

Frame

code	Kesseböhmer	height (mm)	height of the frame (mm)	colour
374266	054379	900–1300	845–1245	grey
353265	054381	1200–1600	1145–1545	
166105	054382	1600–2000	1545–1945	
353266	054384	1800–2200	1745–2145	
374267	054379	900–1300	845–1245	anthracite
374268	054381	1200–1600	1145–1545	
374269	054382	1600–1800	1545–1945	
374270	054384	1800–2200	1745–2145	

Slide with integrated damping system

code	Kesseböhmer	height (mm)	depth (mm)	load capacity (kg)	sliding length (mm)	colour
136192	084235	35	500	100	470	grey
353264	074222	43			370	
402288	084235	35	500	100	470	anthracite
402289	074222	43			370	

- 353264 and 402289 are only for cabinet body 150 mm, this is a partial extension slide

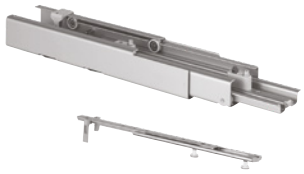

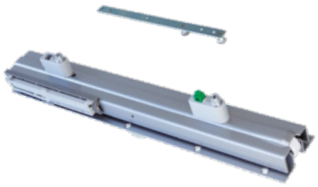

Front bracket

code	Kesseböhmer	width (mm)	colour
353267	235156	150	grey
392744	235421	200	
353268	232216	300	
353269	232217	400	
353270	232218	450	
378845	235156	150	anthracite
392746	235421	200	
315027	232216	300	
315028	232217	400	
378833	232218	450	

- package = 2 pcs

KESSEBÖHMER

Dispensa larder unit

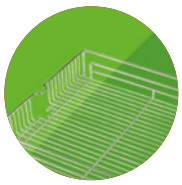

Arena Pure baskets, anthracite (anthracite base)

code	Kesseböhmer	cabinet body (mm)	width (mm)	height (mm)	depth (mm)	package (pcs)
395636	236618	150	95	72	470	1
395638	236463	300	245	72	470	1
395639	236466	400	345	72	470	1
395644	246469	450	395	72	470	1

Arena Style baskets (white base)

code	Kesseböhmer	cabinet body (mm)	width (mm)	height (mm)	depth (mm)	package (pcs)
393237	260179	150	100	94	462	1
393210	260196	200	150	94	462	1
393238	231432	300	250	94	462	1
393239	231433	400	350	94	462	1
393240	260137	450	400	94	462	1

Arena Classic baskets (white base)

code	Kesseböhmer	cabinet body (mm)	width (mm)	height (mm)	depth (mm)	package (pcs)
395515	260182	150	100	106	462	1
393209	235420	200	150	106	462	1
393241	260146	300	250	106	462	1
393243	260149	400	350	106	462	1
166114	260152	450	400	106	462	1

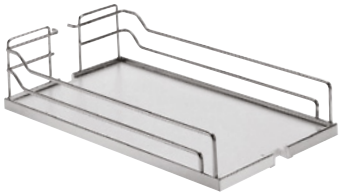

Arena Style baskets (anthracite)

code	Kesseböhmer	cabinet body (mm)	width (mm)	height (mm)	depth (mm)	package (pcs)
402295	260176	150	100	106	462	1
393211	260193	200	150	106	462	1
379700	260118	300	250	106	462	1
380457	260121	400	350	106	462	1
402298	260124	450	400	106	462	1

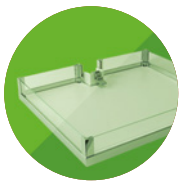

Dispensa larder unit

KESSEBÖHMER

Wire baskets, chrome

code	Kesseböhmer	cabinet body (mm)	width (mm)	height (mm)	depth (mm)	package (pcs)
393244	217781	300	250	110	467	1
393245	231573	400	350	110	467	1
344143	235021	450	350	110	467	1

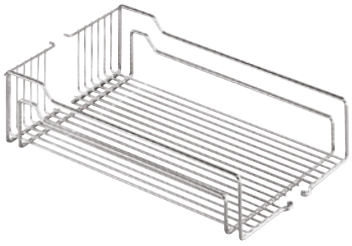

Wire baskets, grey

code	Kesseböhmer	cabinet body (mm)	width (mm)	height (mm)	depth (mm)	package (pcs)
393246	217781	300	250	110	467	1
393247	231573	400	350	110	467	1
393248	235021	450	400	110	467	1

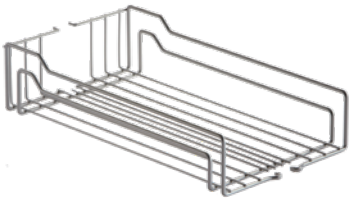

Frame extension

code	Kesseböhmer	width (mm)	colour
212673	4276	125	grey
392747	4276		anthracite

Front stabilizer

code	Kesseböhmer	colour
372743	004350	grey
392753	004350	anthracite

Additional damper

code	Kesseböhmer	description
229279	004243	for damping at full opening

only in combination with 136192 or 402288

Front panel connecting strap

code	Kesseböhmer	colour
383293	000214	grey
315034	000214	anthracite

Dispensa larder unit

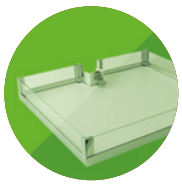

ACCESSORIES

Additional PVC base

code	Kesseböhmer	cabinet body (mm)	width (mm)	height (mm)	depth (mm)
136195	004361	300	238	12	450
136196	004362	400	338	12	450

Bottle rack

code	Kesseböhmer	cabinet body (mm)
136193	004393	300
136194	004394	400

Spice rack for 12 spices

code	Kesseböhmer	width (mm)	height (mm)	depth (mm)	colour
353281	235227	85	33,5	465	grey
392757	235227	85	33,5	465	anthracite

eTouch

code	Kesseböhmer	description
229276	084246	for handleless opening
392925	002440.7001	handleless half-opening

Youboxx Dispensa, Comfort II

KESSEBÖHMER

N Youboxx Dispensa, Comfort II, Dispensa Junior III, Dispensa Junior Slim

code	Kesseböhmer	colour [1]	boxes (litres)
365937	005273	grey/white	2 × 1, 1 × 2, 1, 2 × 2, 2 × lid, 1 × knife holder, 2 × railing
377015	005273	anthracite/anthracite	
405301	005275	grey/white	2 × 1, 2 × 2, 1, 2 × lid, 1 × cross divider, 2 × railing
405300	005275	anthracite/anthracite	

[1] railing/box

- usable for cabinet body widths from 300 mm

365937

405301

KESSEBÖHMER

Youboxx Tandem

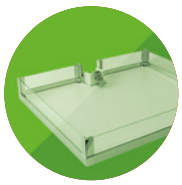

N Youboxx for Tandem

code	Kesseböhmer	cabinet body (mm)	colour[1]	boxes (litres)
402312	261112	450	grey/white	2 × 1
402314	261112		anthracite/anthracite	
402319	261121		grey/white	2 × 2 2 × 2
402320	261121		anthracite/anthracite	
402315	261114	600	grey/white	3 × 1 3 × 1
402316	261114		anthracite/anthracite	
402317	261120		grey/white	1 × 2 + 2 × 1 1 × 2 + 2 × 1
402318	261120		anthracite/anthracite	

[1] railing/box

402312

402319

402315

402317

402318

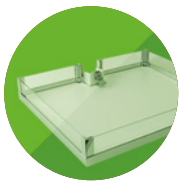

Tandem Side larder unit

KESSEBÖHMER

Tandem Side

- offers the largest amount of storage space of all larder units
- for a minimum inner cabinet body height of 600 mm and more
- for a minimum cabinet body depth of 500 mm and more
- universal right-left mechanism
- roll runner slide with damping with load capacity of 60 kg
- Arena baskets with AntiSlip bottom surface

Tandem Side, Arena Style anthracite

Tandem Side, Arena Pure anthracite, Youboxx

KESSEBÖHMER

Tandem Side larder unit

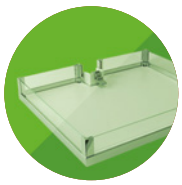

Tandem Side (for doors)

	Arena Pure anthracite / anthracite / anthracite				Arena Style chrome / white / grey				Arena Style anthracite / anthracite / anthracite			
height/ width (mm)	600	800	1100	1700	600	800	1100	1700	600	800	1100	1700
450	**395670**	**395671**	**395672**	**395673**	**395681**	**395682**	**395683**	**395685**	**395690**	**395691**	**395692**	**395693**
600	**395674**	**395675**	**395677**	**395678**	**395686**	**395687**	**395688**	**395689**	**395694**	**395695**	**395696**	**395697**
number of baskets	2	3	4	5	2	3	4	5	2	3	4	5

Separate Tandem Side basket (for doors)

width (mm)	Arena Pure anthracite / anthracite / anthracite	Arena Style chrome /white / grey	Arena Style anthracite / anthracite / anthracite
450	**395698**	**395701**	**395703**
600	**395699**	**395702**	**395704**

Colours:
- basket/base/frame

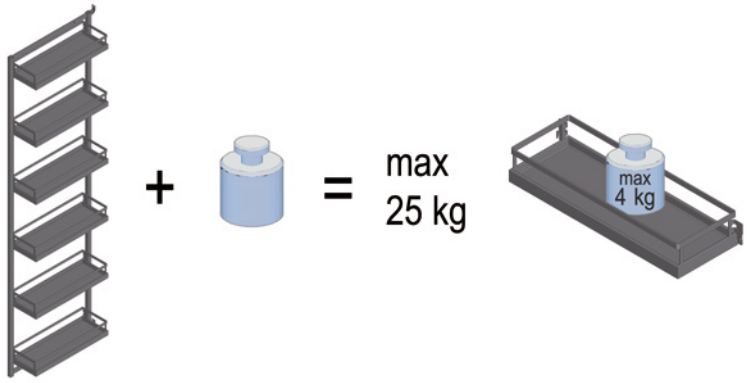

Tandem Side can be completed with Youboxx – see p. 6.18

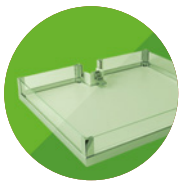

Tandem II. larder unit

KESSEBÖHMER

Tandem II

- It is necessary to combine inner Tandem and Tandem Side.
- Colours are listed in form: basket /base / f rame (e.g. chrome / white / grey means chrome baskets with a white bottom on a grey frame).

Tandem II. (inner part)

	Arena Pure anthracite / anthracit e/ anthracite			Arena Style chrome / white /grey			Arena Style anthracite / anthracite / anthracite		
height\ width (mm)	800	1100	1700	800	1100	1700	800	1100	1700
450	×	395647	395648	×	395654	395655	×	395661	395662
600	395649	395650	395651	395656	395657	395658	395663	395664	395665
number of baskets	3	4	5	3	4	5	3	4	5

Separate Tandem II. basket

width (mm)	Arena Pure, anthracite	Arena Style, chrome	Arena Style, anthracite
450	395652	395659	395666
600	395653	395660	395667

Tandem

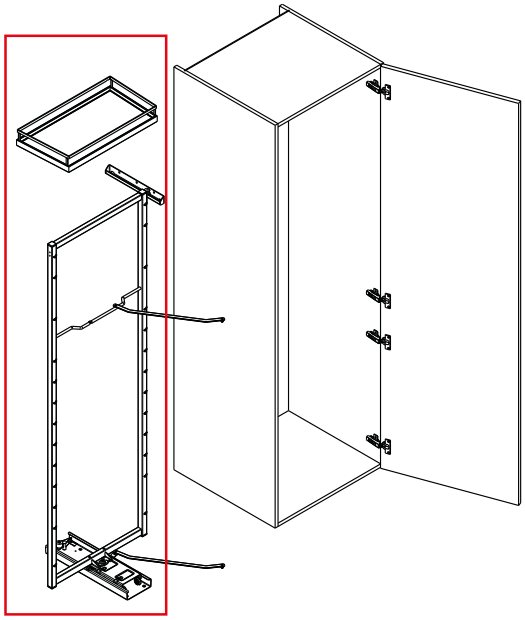

Tandem Side

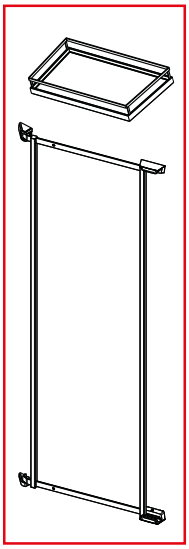

Tandem Side can be completed with Youboxx – see p. 6.18

KESSEBÖHMER

Tandem II. larder unit

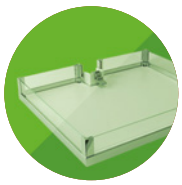

Tandem Side (for doors)

	Arena Pure anthracite / anthracite / anthracite			Arena Style chrome / white / grey			Arena Style anthracite / anthracite / anthracite		
height\ width (mm)	800	1100	1700	800	1100	1700	800	1100	1700
450	×	395672	395673	×	395683	395685	×	395692	395693
600	395675	395677	395678	395687	395688	395689	395695	395696	395697
number of baskets	3	4	5	3	4	5	3	4	5

- Colours: anthracite/anthracite/anthracite means that all parts – the basket, the base and the frame – are anthracite

Separate Tandem Side basket (for doors)

width (mm)	Arena Pure anthracite /anthracite / anthracite	Arena Style chrome / white / grey	Arena Style anthracite /anthracite / anthracite
450	395698	395701	395703
600	395699	395702	395704

- Colours: anthracite/anthracite/anthracite means that all parts – the basket, the base and the frame – are anthracite

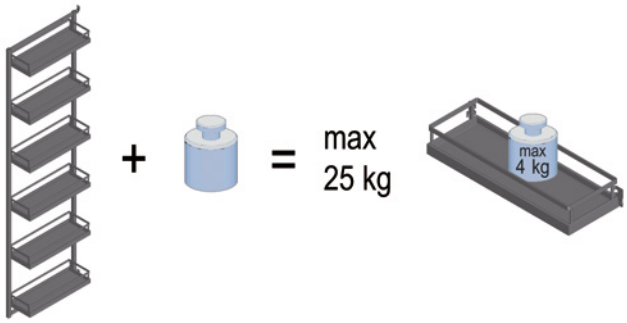

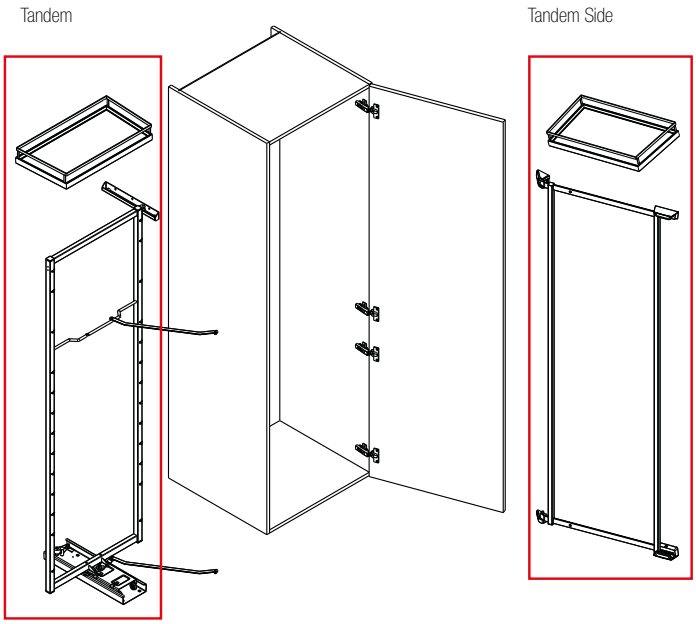

Tandem Side can be completed with Youboxx – see p. 6.18

corner solutions

KESSEBÖHMER

LeMans II

- for bottom corner cabinets with dimensions 800–1200 mm
- load capacity 25 kg, newly with the possibility of damping when closing the Arena basket with AntiSlip base
- assembly manual including a paper template for pre-drilling included in the package

Arena Pure shelves set, anthracite (anthracite base)

code	Kesseböhmer	door width (mm)	orientation
392972	260392	450	right
392973	260393	450	left
392974	260394	500	right
392975	260395	500	left
392976	260396	600	right
392977	260397	600	left

Arena Style shelves set (anthracite base) with supporting arms

code	Kesseböhmer	door width (mm)	orientation
315009	234621	450	right
315010	234622	450	left
315011	234623	500	right
315012	234624	500	left
314975	324625	600	right
315013	324626	600	left

Arena Style shelves set (white base) with supporting arms

code	Kesseböhmer	door width (mm)	orientation
135917	233045	450	right
135918	233046	450	left
135919	233047	500	right
135920	233048	500	left
135921	233049	600	right
135922	233050	600	left

corner solutions

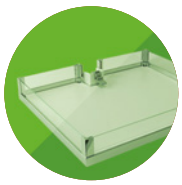

Arena Classic shelves set (white base)

code	Kesseböhmer	door width (mm)	orientation
198575	235010	400	right
198576	235011	400	left
135871	235012	450	right
135872	235013	450	left
135873	235014	500	right
135874	235015	500	left
135875	235016	600	right
135876	235017	600	left

Arena Classic shelves set (grey)

code	Kesseböhmer	door width (mm)	orientation
367970	47918	400	right
367971	47919	400	left
178466	47920	450	right
178467	47921	450	left
178468	47923	500	right
178469	47923	500	left
178470	47924	600	right
178471	47925	600	left

LeMans II cabinet body dimensions

door width: 400 mm

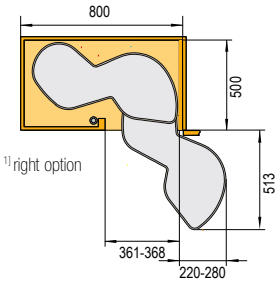

door width: 450 mm

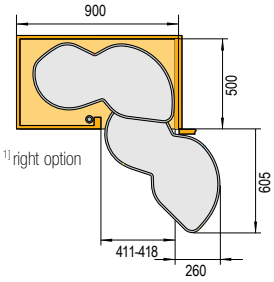

door width: 500 mm

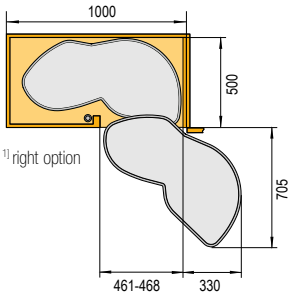

door width: 600 mm

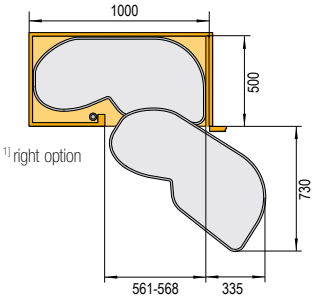

Side attachment + rod

code	Kesseböhmer	height (mm)	colour
160132	007944	600–750	white
315036	007944	600–750	anthracite
161012	007944	600–750	grey
390129	007945	720–900	white
393197	007945	720–900	anthracite
393199	007943	1265	white
393200	097943	1265	anthracite

ACCESSORIES

LeMans II damping set of 2 pcs

code	Kesseböhmer	specification	colour
318463	234641	right	white
318464	234642	left	
315039	234641	right	anthracite
315037	234642	left	
318465	234641	right	grey
318466	234642	left	

Transport safety latch

188755	transport safety latch

- prevents already fitted mechanism from undesired opening during transportation

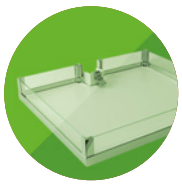

corner solutions

KESSEBÖHMER

Magic Corner

- comfortable solution for bottom corner cabinet
- with soft closing
- doors are mounted using a clip-type mechanism and can be adjusted in 3 directions
- Arena baskets with white AntiSlip base
- for cabinet body widths 900–1000 mm
- basket load capacity:
- front 14 kg
- corner 18 kg

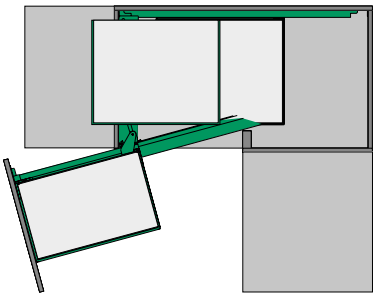

left option

Magic Corner for 900–1000 mm corner

code	Kesseböhmer	specification	width (mm)	height (mm)	depth (mm)	hole width
135867	260401	right, pull-out with door	860–971	525	485	450
135868	260402	left, pull-out with door	860–971	525	485	450

Arena Style baskets (white base)

code	Kesseböhmer	description
135869	260400	set of Arena Style baskets

Arena Classic baskets (white base)

code	Kesseböhmer	description
135916	260403	set of Arena Classic baskets

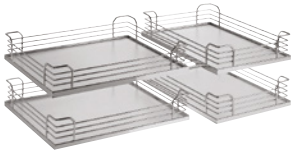

Wire baskets, chrome

code	Kesseböhmer	description
135870	006207	set of wire chrome baskets

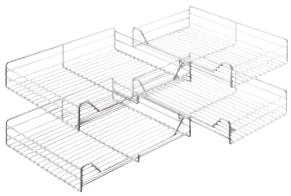

Wire baskets, grey

code	Kesseböhmer	description
178465	006207	set of wire grey baskets

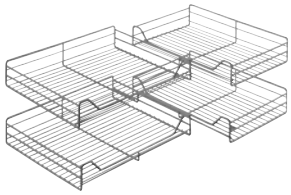

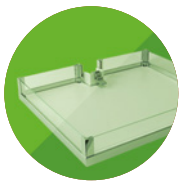

Revo 90°

- 3/4 carousel with doors mounted directly onto the mechanism
- the door rotate together with the carousel when opened
- with soft closing

- for bottom corner cabinet body with dimensions 800–900 mm
- Arena baskets with AntiSlip base
- mechanism load capacity 50 kg
- **Note the different cabinet body construction, see the drawing below**

Revo 90° mechanism

code	Kesseböhmer	height (mm)
135888	260500	660–860

Arena Style shelf (white base)

code	Kesseböhmer	cabinet body (mm)	diameter (mm)
135890	260503	800	710
135891	260506	900	810

- package contains 2 shelves

Arena Classic shelf (white base)

code	Kesseböhmer	cabinet body (mm)	diameter (mm)
135923	260554	800	710
135924	260555	900	810

- package contains 2 shelves

Wire shelves

code	Kesseböhmer	cabinet body (mm)	diameter (mm)
135892	260501	800	700
135893	260504	900	800

- package contains 2 shelves

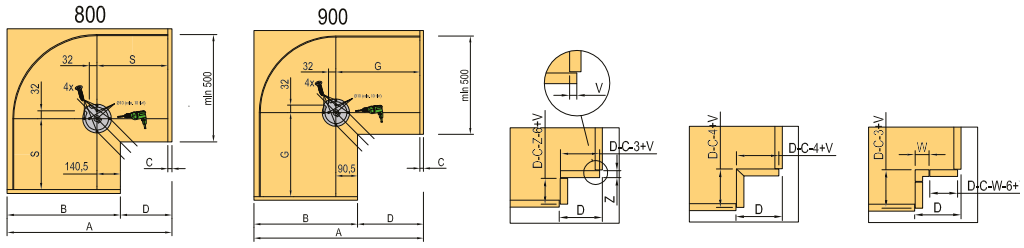

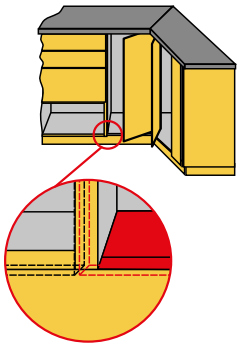

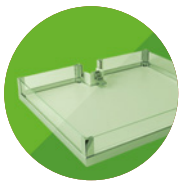

Carousel 270°, 180°

KESSEBÖHMER

Carousel 270°, 180°

- classic 3/4 and 1/2 carousel
- for bottom corner cabinet bodies with a width of 800–900 mm
- Arena baskets with AntiSlip base
- 25 kg load capacity per shelf

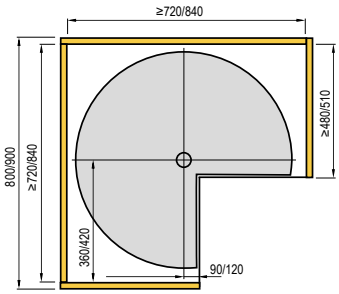

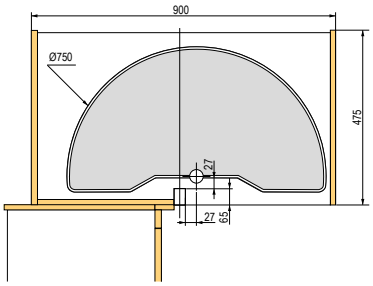

Axle

code	Kesseböhmer	height (mm)
353254	250052	655–745

Arena Style shelf (white base)

code	Kesseböhmer	cabinet body (mm)	diameter (mm)	depth (mm)
353255	260546	800	720	480
353256	260547	900	800	510
392989	260542	900	800	475

392989 – ATTENTION – this is 1/2 circle

Arena Classic shelf (white base)

code	Kesseböhmer	cabinet body (mm)	diameter (mm)	depth (mm)
353257	260548	800	720	480
353258	260549	900	800	510
392990	260543	900	800	475

392990 – ATTENTION – this is 1/2 circle

Wire shelves (chrome)

code	Kesseböhmer	cabinet body (mm)	diameter (mm)	depth (mm)
392986	260552	800	720	480
392987	260553	900	800	510
392991	260545	900	800	475

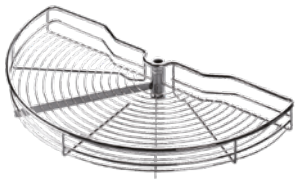

392991 – ATTENTION – this is 1/2 circle

KESSEBÖHMER

baskets for 150 mm

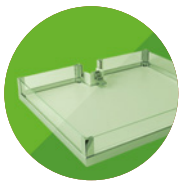

Baskets for cabinet bodies with a width of 150 mm

- min. inner clearance 112 mm
- with damping on the side slide
- max. load capacity 12 kg

Pull-out basket, 90°

code	Kesseböhmer	description	colour
393202	233461	Arena Style	chrome
135608	233460	Arena Classic	chrome
178472	233460	Arena Classic	grey
314999	233461	Arena Style	anthracite

- right option
- dimensions: width 112 mm, height 540 mm, depth 481 mm
- unique adjustment system located under the shelf
- allows easy adjustment of the front in 3 directions

Pull-out basket, 90°, with towel holder

code	Kesseböhmer	description	colour
393204	233465	Arena Style	chrome
135611	233464	Arena Classic	
315000	233456	Arena Style	anthracite

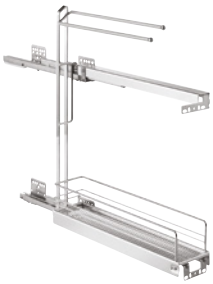

- right option
- dimensions: width 112 mm, height 540 mm, depth 481 mm
- unique adjustment system located under the shelf
- allows easy adjustment of the front in 3 directions

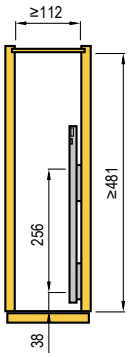

Pull-out basket 90° with baking tray holder

code	Kesseböhmer	description	colour
380500	233469	Arena Style	anthracite

- dimensions: width 112 mm, height 540 mm, depth 481 mm

Cross divider into a 90° basket

code	Kesseböhmer	description	colour
402382	260601	Arena Style	chrome
402383	260601	Arena Style	anthracite
402384	260600	Arena Classic	chrome
406667	260600	Arena Classic	grey

Dispensa Junior III, Cooking agent

KESSEBÖHMER

Dispensa Junior III – frame

code	Kesseböhmer	description
245870	005262	frame for 300 mm cabinet body
245871	005265	frame for 400 mm cabinet body
353263	005268	frame for 450 mm cabinet body

- set includes only frame and full extension slide with damping with bottom mounting
- fasteners allow adjustment of the front in 3 directions

frame is combined with shelves for Dispensa (p. 6.14) and with shelves for Comfort (p. 6.30)

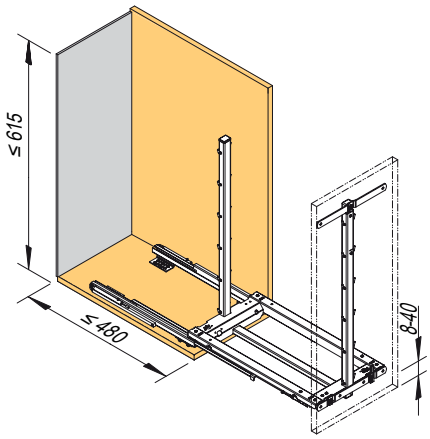

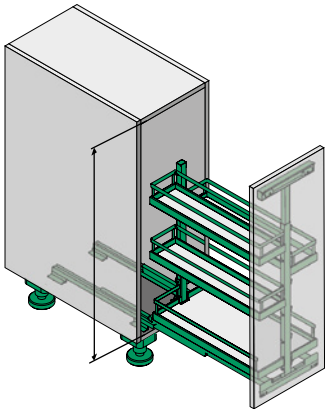

Cooking agent

code	Kesseböhmer	description
231353	002523	with front holders

- original pull-out basket with the possibility of storing various items
- bottom mounting
- washable plastic

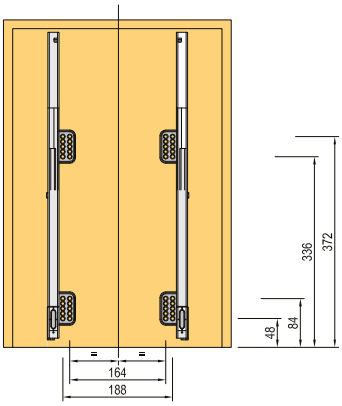

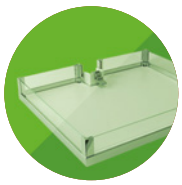

Comfort II side frame

- side frame with ball bearing full extension slides with damping
- for cabinet bodies with a width of 190–400 mm and a height of min. 700 mm
- 20 kg load capacity mechanism
- for 90° cabinets and cabinets bevelled at 45°
- Arena baskets with AntiSlip surface

Side pull-out frame including front holders 90°

code	Kesseböhmer	option	height (mm)	depth (mm)
405930	260750	left	662	496
405931	260751	right	662	496

Front holder 45°

code	Kesseböhmer	option
284553	015148	45°

- use with frame 405930, 405931 replace the holders

Arena Style basket 90° (white base)

code	Kesseböhmer	width (mm)	height (mm)	depth (mm)	package (pcs)
405372	260758	110	75	470	2
405373	260759	110	75	470	3
405374	260760	160	75	470	2
405378	260761	160	75	470	3
405380	260792	210	75	470	2
405381	260793	210	75	470	3
405383	260764	320	75	470	2
405384	260765	320	75	470	3

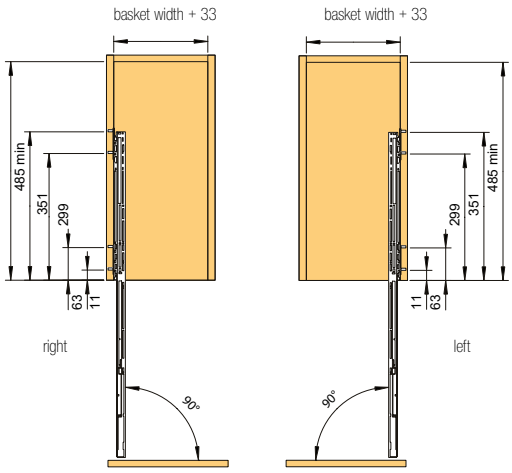

Arena Classic basket 90° (white base)

code	Kesseböhmer	width (mm)	height (mm)	depth (mm)	package (pcs)
405394	260767	110	88	470	2
405395	260768	110	88	470	3
405396	260769	160	88	470	2
405397	260770	160	88	470	3
405398	260796	210	88	470	2
405399	260797	210	88	470	3
405400	260773	295	88	470	2
405401	260774	295	88	470	3

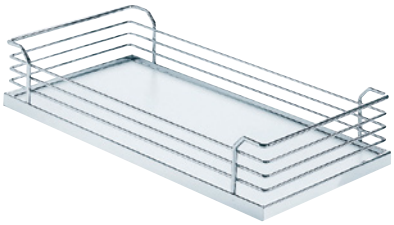

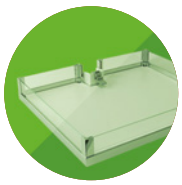

Comfort side frame

KESSEBÖHMER

Arena Classic basket 90°, grey

code	Kesseböhmer	width (mm)	height (mm)	depth (mm)	package (pcs)
178452	260776	110	88	470	2
406907	260777	110	88	470	3
178453	260778	160	88	470	2
406908	260779	160	88	470	3
178454	260810	210	88	470	2
406911	260811	210	88	470	3
178455	260782	295	88	470	2
406914	260783	295	88	470	3

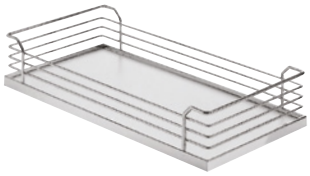

Wire basket, 90°, chrome

code	Kesseböhmer	width (mm)	height (mm)	depth (mm)	package (pcs)
405416	235027	110	75	470	2
405417	235028	110	75	470	3
405418	235029	160	75	470	2
405419	235030	160	75	470	3
405420	233399	210	75	470	2
405421	235031	210	75	470	3
405422	235032	320	75	470	2
405424	235033	320	75	470	3

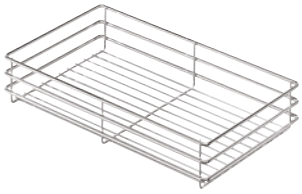

Wine bottle rack

code	Kesseböhmer	width (mm)	height (mm)	depth (mm)
144165	005144	210	108	470

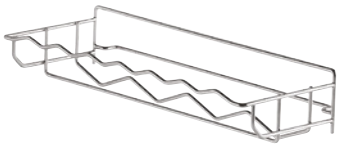

Arena Style 45° basket

code	Kesseböhmer	cabinet body (mm)	option	width (mm)	height (mm)	depth (mm)
135637	055070	300	left	228	75	470
135638	055071	300	right	228	75	470

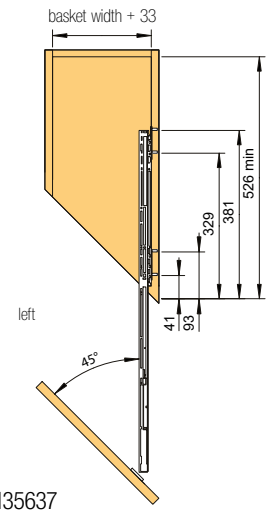

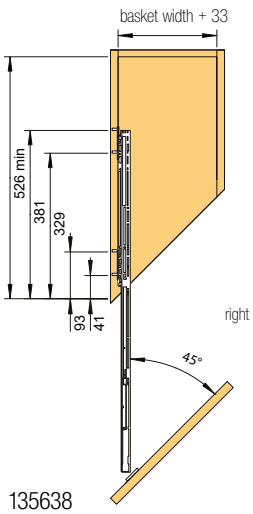

Comfort side frame

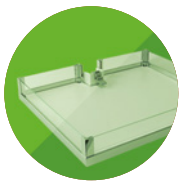

Arena Classic basket 45° (white base)

code	Kesseböhmer	cabinet body (mm)	option	width (mm)	height (mm)	depth (mm)
135914	015070	300	left	228	88	470
135915	015071	300	right	228	88	470

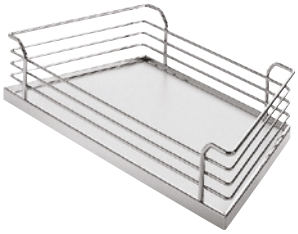

135914

Arena Classic basket 45° grey

code	Kesseböhmer	cabinet body (mm)	option	width (mm)	height (mm)	depth (mm)
178456	045070	300	left	228	88	470
178457	045071	300	right	228	88	470

Wire basket, 45°, chrome

code	Kesseböhmer	cabinet body (mm)	option	width (mm)	height (mm)	depth (mm)
135639	005070	300	left	228	75	470
135913	005071	300	right	228	75	470

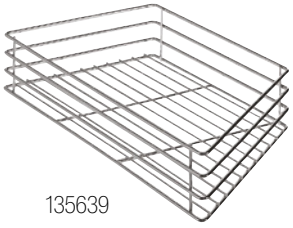

135639

ACCESSORIES

Spice container holder

code	Kesseböhmer	width (mm)	height (mm)	depth (mm)	number of spice containers
301674	015277	133	76	479	18

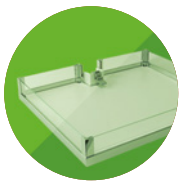

Dispensa Junior Slim

KESSEBÖHMER

Frame

code	Kesseböhmer	cabinet body (mm)	colour
393207	005450	640–728	grey
393208	005450	640–728	anthracite

can be combined with Youboxx, see page 6.17

Front holder for 150 mm cabinet body

code	Kesseböhmer	colour
402953	005454	grey
402954	005454	anthracite

Arena Pure baskets, anthracite (anthracite base)

code	Kesseböhmer	cabinet body (mm)	width (mm)	height (mm)	depth (mm)	package (pcs)
395636	236618	150	95	72	470	1
395638	236463	300	245	72	470	1
395639	236466	400	345	72	470	1

Arena Style baskets (white base)

code	Kesseböhmer	cabinet body (mm)	width (mm)	height (mm)	depth (mm)	package (pcs)
393237	260179	150	100	94	462	1
393210	260196	200	150	94	462	1
393238	231432	300	250	94	462	1
393239	231433	400	350	94	462	1

Arena Classic baskets (white base)

code	Kesseböhmer	cabinet body (mm)	width (mm)	height (mm)	depth (mm)	package (pcs)
395515	260182	150	100	106	462	1
393209	235420	200	150	106	462	1
393241	260146	300	250	106	462	1
393243	260149	400	350	106	462	1

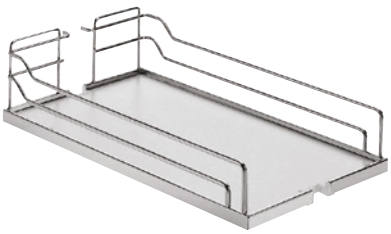

KESSEBÖHMER

Dispensa Junior Slim

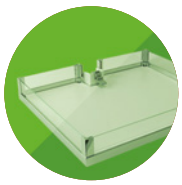

Arena Style baskets (anthracite base)

code	Kesseböhmer	cabinet body (mm)	width (mm)	height (mm)	depth (mm)	package (pcs)
402295	260182	150	100	106	462	1
393211	260193	200	150	106	462	1
379700	260146	300	250	106	462	1
380457	260149	400	350	106	462	1

Wire baskets, grey

code	Kesseböhmer	cabinet body (mm)	width (mm)	height (mm)	depth (mm)	package (pcs)
393246	217781	300	250	110	467	1
393247	231573	400	350	110	467	1

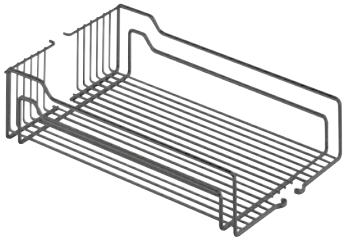

Additional PVC base

code	Kesseböhmer	cabinet body (mm)	width (mm)	height (mm)	depth (mm)
136195	004361	300	238	12	450
136196	004362	400	338	12	450

inner drawers

KESSEBÖHMER

Drawers

Arena inner drawer

- inner drawers on concealed slides with Blum soft closing for cabinet bodies from a width of 400–600 mm and a depth of 500 mm
- load capacity 30 kg
- baskets with spacer strips are designed for doors with hinges opened in the usual way
- Arena baskets with AntiSlip surface

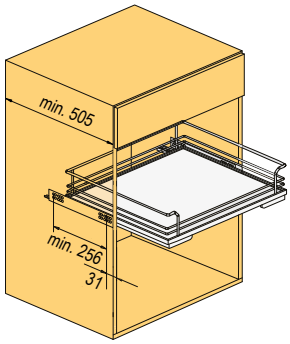

Arena Classic drawer (white base)

code	Kesseböhmer	cabinet body (mm)	width (mm)	height (mm)	depth (mm)
164874	260917	400	353	125	488
164875	260922	450	403	125	488
164877	260938	600	553	125	488
164878[1]	260923	450	377	125	488
164880[1]	260939	600	527	125	488

[1] for use with a spacer strip

ACCESSORIES

Spacer strip

code	Kesseböhmer	description
135670	008756	offset 25 mm, chrome

- placed on hinge side only

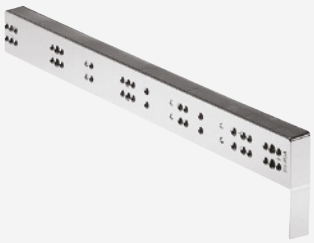

1 shelf

code	Kesseböhmer	width (mm)	height (mm)	depth (mm)
136095	001079	368	79	103

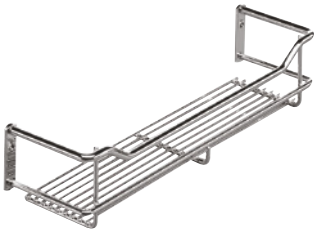

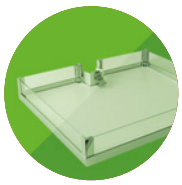

iMove

- folding mechanism
- load capacity 8 kg
- connecting material (8 × screw 4.5 × 50 mm) and drilling template included in the package

1 shelf

code	Kesseböhmer	colour	cabinet body (mm)	internal cabinet body width (mm)	width (mm)	depth (mm)	height (mm)
315042	021706	anthracite	900	862–868	865	267	380
315040	021702	anthracite	600	562–568	565	267	380

2 shelves

code	Kesseböhmer	colour	cabinet body (mm)	internal cabinet body width (mm)	width (mm)	depth (mm)	height (mm)
315041	021712	anthracite	600	562–568	565	267	565
278990	021712	grey	600	562–568	565	267	565

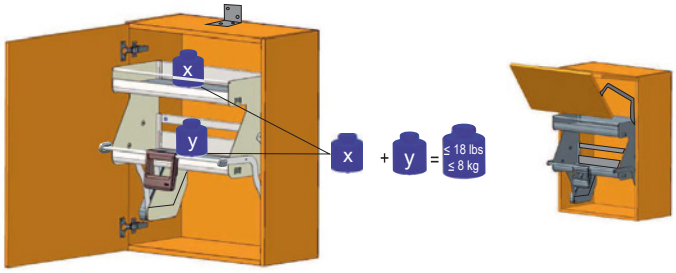

TurnMotion II

KESSEBÖHMER

TurnMotion II

- a set of practical rotating shelves that make it easy to access items stored in the top cabinets
- rotates in both directions by 360°
- locking of the shelves by 90°
- max. load capacity 20 kg

1 shelf

code	Kesseböhmer	description	cabinet body (mm)	width (mm)
315044	235253	Arena Style, anthracite	600	562–568
359664	235224	Arena Classic, white base	600	562–568

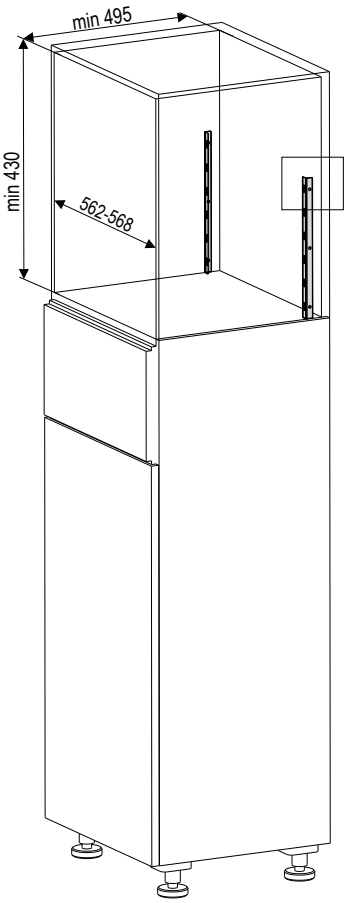

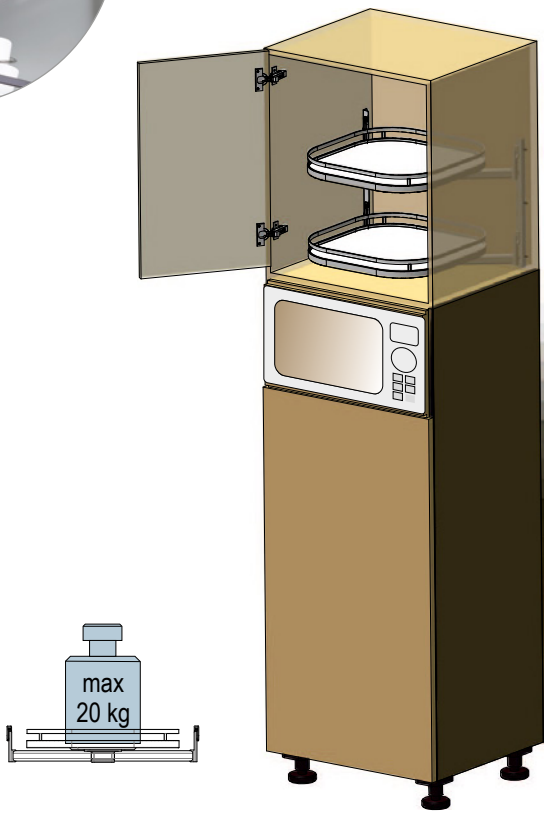

TopFlex, Linero MosaiQ

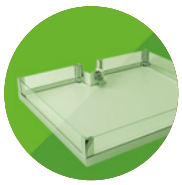

TopFlex

- fittings set for additional worktop
- can be opened as a drawer and used as a worktop or breakfast table if required
- board thickness: 15–19 mm
- for cabinet body width: 450–900 mm
- for depth: min. 500 mm
- pull-out length: 810 mm
- load capacity: 30 kg

code	Kesseböhmer	description
353320	005236	drop-down front
353321	005238	fixed front

fixed front

drop-down front

Linero MosaiQ hinge system

- colour: light grey
- allows stacking of profiles one next to another in the required length
- LED strip can be inserted into the profile and the system can be used to light the worktop
- plastic cover cap hides the profile joints

code	Kesseböhmer	description
284704	008900.9845	bearing aluminium profile 600 mm
284705	008901.9845	bearing aluminium profile 900 mm
284706	008902.9845	bearing aluminium profile 1200 mm
284707	008914.9843	shelf without railing
284708	008918.9843	shelf with railing
284709	008906.9843	magnetic knife holder
284710	008922.9843	small hook for rail
284711	008908.9843	paper roll holder
284712	008910.9003	container
347012	008623.9843	rail with 6 hooks
393302	008925.9843	top shelf 350 mm
374116	008932	smoked glass shelf

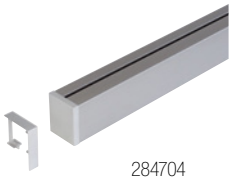

284704
284705
284706

284707

284708

284709

284710

284711

284712

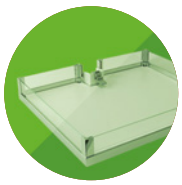

YouK shelf system

KESSEBÖHMER

YouK

- frame depth 20 or 30 cm
- spacious shelf system
- unlimited combination of variations
- trendy black frames
- can be used as a wardrobe in the kitchen, living room, bathroom or office
- wall mounting with a possibility of a support adjustable foot
- solid steel (30 × 15 × 1.5 mm)
- adjustable leg designed for a frame depth of 320 mm

N YouK frames

code	Kesseböhmer	height (mm)	colour
389923	236746	200 × 668	black
389924	236748	200 × 905	black
389925	236750	320 × 550	black
389926	236754	320 × 905	black
389927	236758	320 × 1500	black
389928	236762	320 × 2210	black

Adjustable leg

code	Kesseböhmer	height (mm)	colour
389929	237023	100	black

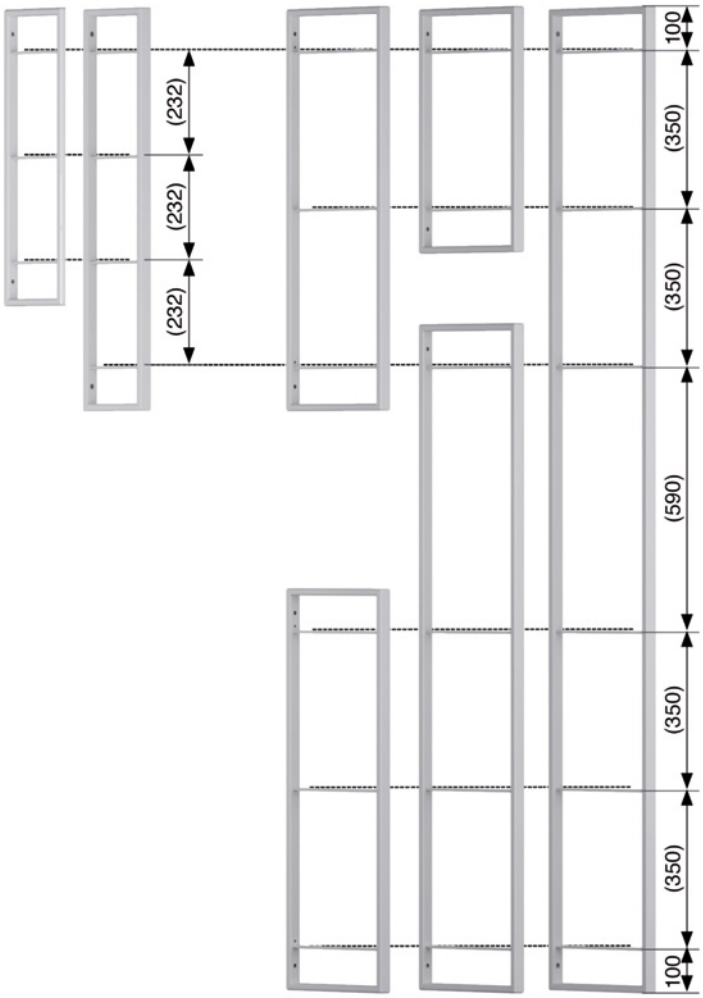

KESSEBÖHMER

YouK shelf system

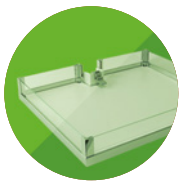

Vibo overview

Vibo product series overview

Galaxy

- Refined design with oval wire, melamine base and high-quality chrome wire.

Essence

- Harmony of modern design and elegant minimalism.

Standard

- Classic design of linear wire presented in the widest range of product variants and sizes.

Prestige

- Wide range of wardrobe accessories that meet the demands of modern furniture.

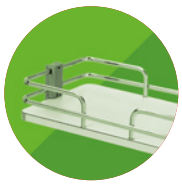

Larder unit

- all slides include damping
- choice of 3 types of slides
- baskets and front holders are the same for both frame types

Frame without a slide

code	height (mm)
87830	1160–1480
87831	1460–1780
87832	1760–2080

- a ball bearing slide 87809 or 87833 must be added

Frame with a slide (120 kg)

height (mm)	grey
1160–1480	**170004**
1460–1780	**170005**
1760–2080	**170006**

- combination with roll runner slide (top + bottom), load capacity 120 kg

Top + bottom slide (120 kg)

code	load capacity (mm)	depth (mm)
87809	120	486

- ball bearing full extension slides (top + bottom) with damping

Top + bottom slide, rotating (200 kg)

code	load capacity (mm)	depth (mm)
87833	200	500

- full extension slides (top + bottom) with damping and rotary option when fully opened

ACCESSORIES

Extension part for suspension of the basket into the top (telescopic) part of the frame

87813	height 160 mm

- serves for placing the basket above standard positions on the frame

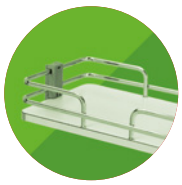

larder unit

Roll runner slide

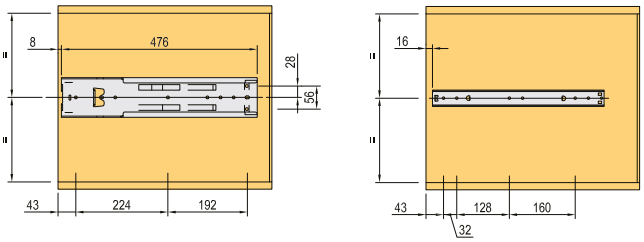

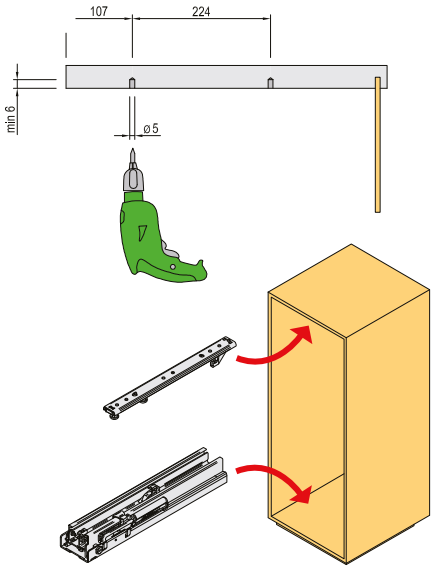

Ball bearing slide

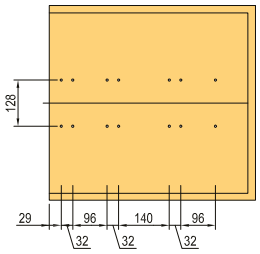

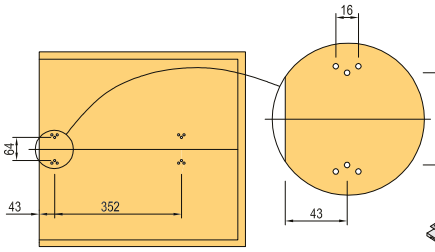

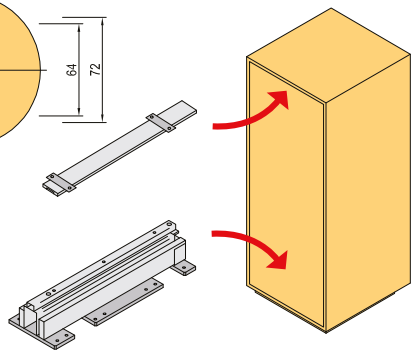

Roll runner slide – rotating

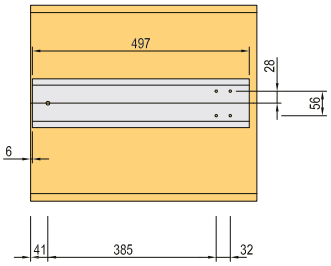

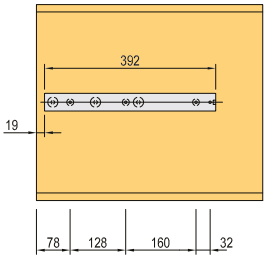

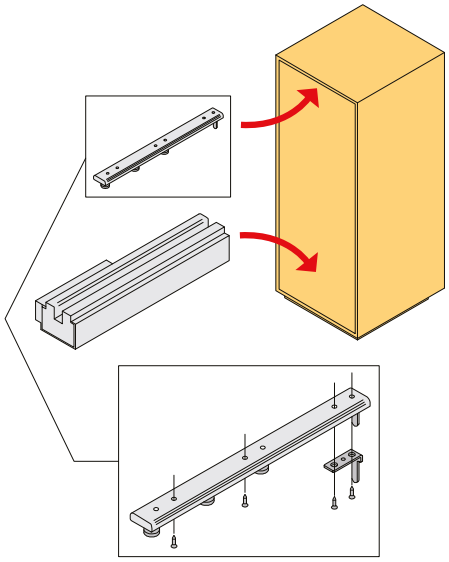

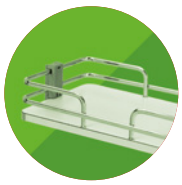

Baskets for larder units

Wire basket, chrome
Standard

code	cabinet body (mm)	width (mm)	depth (mm)	height (mm)
87814	300	246	412	80
87815	400	346	412	80
87816	450	396	412	80
87817	500	446	412	80
87818	600	546	412	80

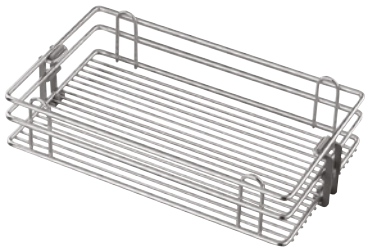

Basket with full base, chrome/white
Galaxy

code	cabinet body (mm)	width (mm)	depth (mm)	height (mm)
306265	300	246	412	93
306266	400	346	412	93
306267	450	396	412	93
306268	600	546	412	93

Basket with glass sides, grey Essence

code	cabinet body (mm)	width (mm)	depth (mm)	height (mm)
306271	300	247	477	87
306272	400	347	477	87

- glass 5 mm

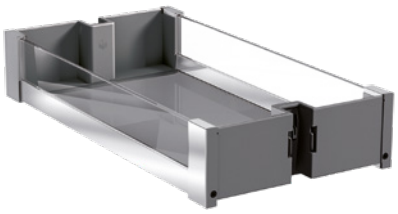

Door holder

code	cabinet body (mm)	width (mm)	depth (mm)	height (mm)	colour
87803	300	250	40	45	grey
87804	400	350	40	45	grey
87805	450	400	40	45	grey
87806	500	450	40	45	grey
87807	600	550	40	45	grey

- at least 2 holders must be ordered

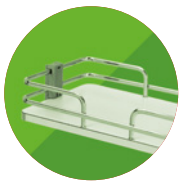

corner solutions

Fly Moon

- mechanism with soft closing
- possibility to pull each self out separately
- load capacity 20 kg

Standard shelves sets, chrome/white

code	cabinet body (mm)	width (mm)	depth (mm)	height (mm)	mounting	supporting-structure
363869	900	816	434	655–705	right	**FLY11**
363872	900	816	434	655–705	left	**FLY12**
293029	1200	974	453	655–705	right	**FLY13**
293030	1200	974	453	655–705	left	**FLY14**

it is necessary to combine the shelves with the corresponding supporting structure

- round wire

Galaxy shelves sets, chrome/white

code	cabinet body (mm)	width (mm)	depth (mm)	height (mm)	mounting	supporting-structure
316054	800	754	399	655–705	right	**FLY11**
316058	800	754	399	655–705	left	**FLY12**
316060	900	816	434	655–705	right	**FLY11**
316061	900	816	434	655–705	left	**FLY12**
316062	1200	974	453	655–705	right	**FLY13**
316063	1200	974	453	655–705	left	**FLY14**

it is necessary to combine the shelves with the corresponding supporting structure

- choose the correct side according to the door position on the cabinet body
- if the door is on the right of the cabinet body, you need the right option
- luxury version with white anti-slip base
- oval wire

corner solutions

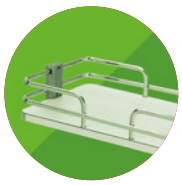

Body mounting dimensions for Fly Moon corner shelves:

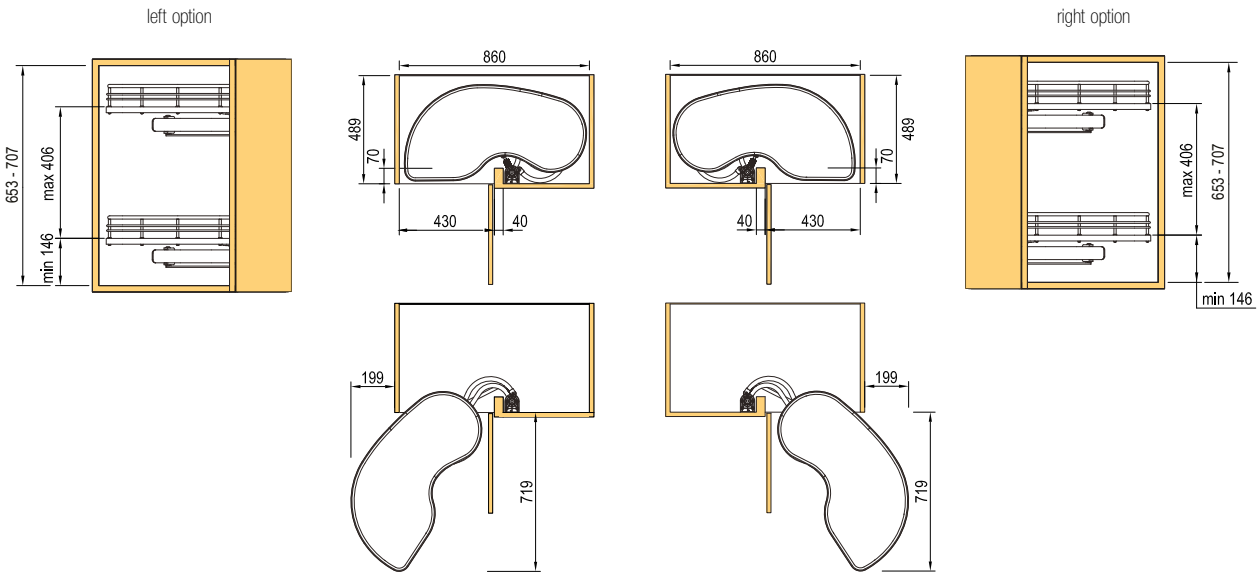

corner solutions

Smart Corner mechanism for the bottom corner

- with soft closing
- inner baskets can be pulled out separately

Smart Corner – standard, chrome

code	width (mm)	depth (mm)	height (mm)	mounting
87858	850	489	568	right
87859	850	489	568	left

- baskets for corner 450 mm cabinets
- 2 baskets on the door, 2 baskets in the cabinet

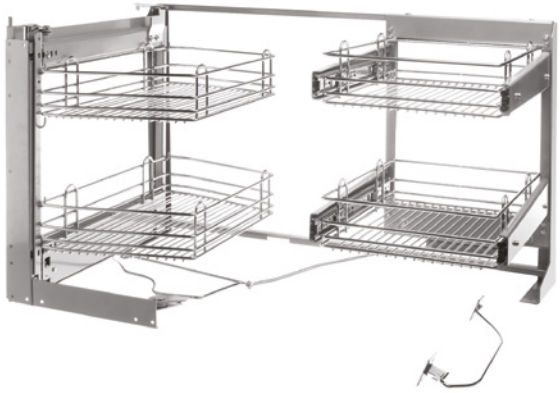

left option

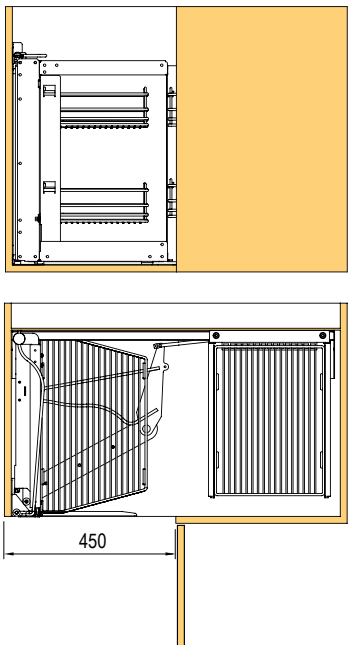

right option

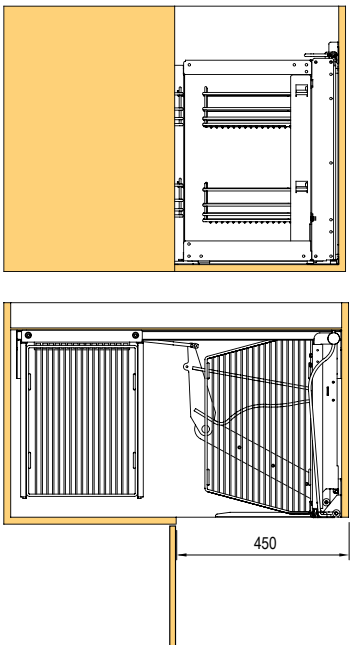

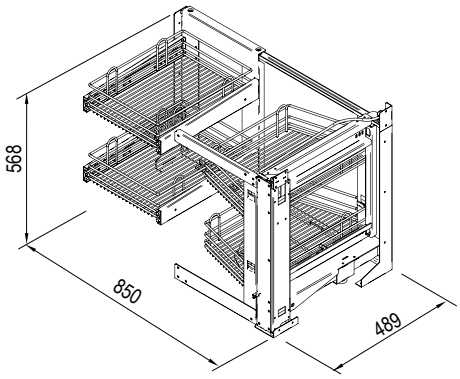

corner solutions

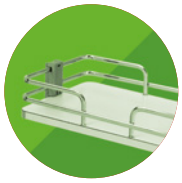

Smart Corner – Galaxy, chrome

code	width (mm)	depth (mm)	height (mm)	mounting
306260	850	489	568	right
306259	850	489	568	left

- baskets for corner 450 mm cabinets
- 2 baskets on the door, 2 baskets in the cabinet

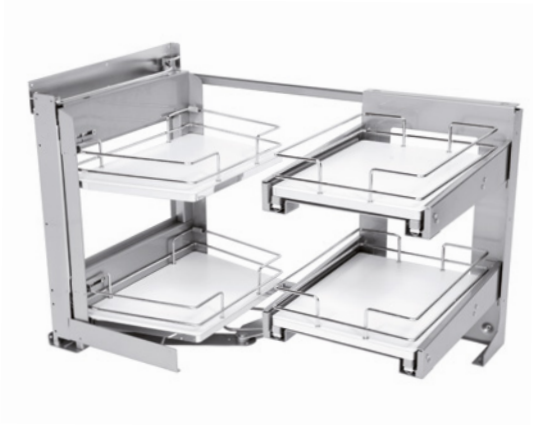

Easy Corner

code	cabinet body (mm)	width (mm)	depth (mm)	height (mm)
141616	900	855	473	678

- baskets for corner 450 mm cabinets
- 2 baskets on the door, 2 baskets in the cabinet
- right-left

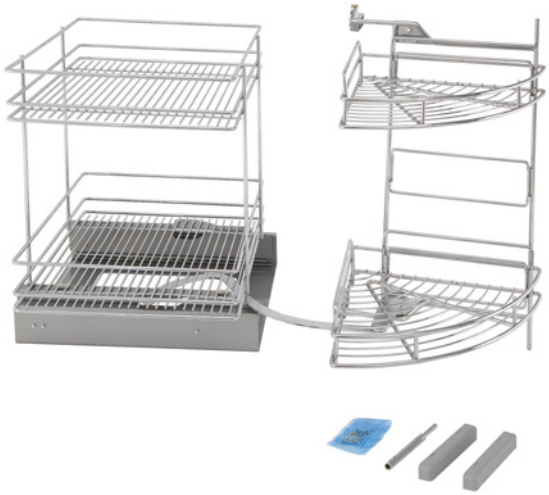

Rotating trays

1/2 circle pull-out rotating tray, chrome

code	cabinet body (mm)	width (mm)	depth (mm)	height (mm)
88449	900	760	420	645–790

- set contains: 2 × carousel, 1 × rotary tube, locking rings
- rotating trays attached on the tube can be pulled-out after rotation
- for inner height 645–790 mm

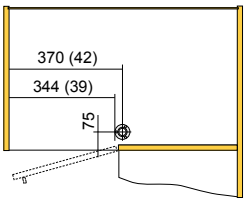

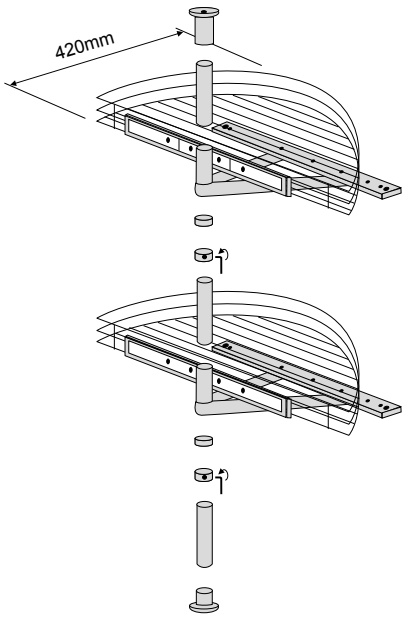

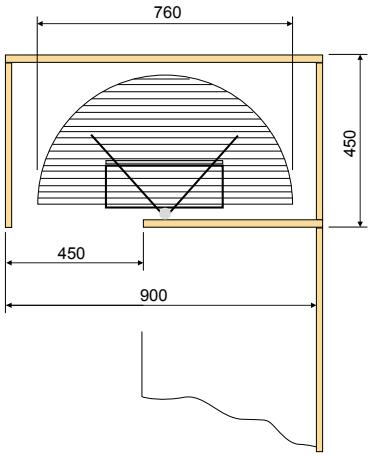

corner solutions

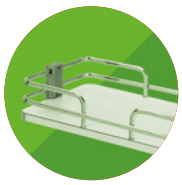

1/2 circle rotating tray, chrome

code	cabinet body (mm)	width (mm)	depth (mm)	height (mm)
88404	800	760	420	645–790

- universal – right-left
- set contains: 2 × carousel, 1 × holder, 1 × dragging bracket
- rotating trays are mounted on a holder attached to the cabinet body; thanks to the dragging bracket mounted on the door, one basket rotates outwards when the door opens

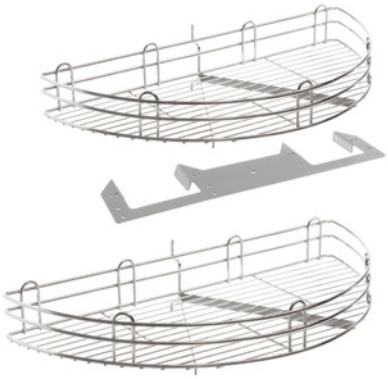

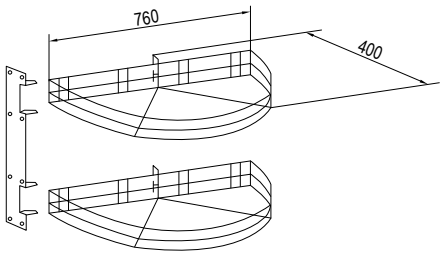

3/4 circle rotating tray, chrome

code	cabinet body (mm)	width (mm)	depth (mm)	height (mm)
162230	900	815	-	645–720

- the complete mechanism includes: 1 pc of tube for carousel + 2 wire shelves

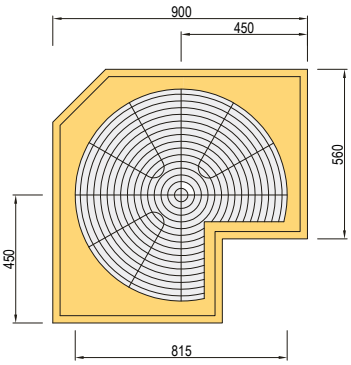

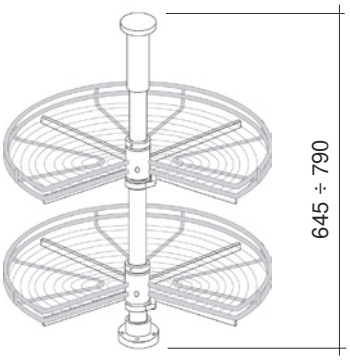

side baskets for tall cabinet body

Slim pull-out baskets 150 mm

- side mounting
- full extension slide with damping
- load capacity 60 kg
- minimum cabinet body height 1,900 mm

Universal pull-out baskets

code	cabinet body (mm)	width (mm)	depth (mm)	height (mm)
228199	150	107	469	1700

- front holders are included in the package

Pull-out baskets for bottles

code	cabinet body (mm)	width (mm)	depth (mm)	height (mm)
228268	150	107	469	1700

- front holders are included in the package

side baskets for tall cabinet body

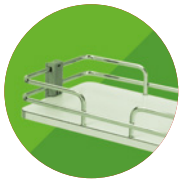

Pull-out baskets for cleaning tools

code	cabinet body (mm)	width (mm)	depth (mm)	height (mm)
228200	150	107	469	1700

- front holders are included in the package

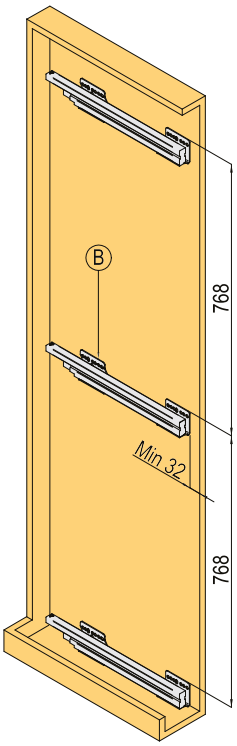

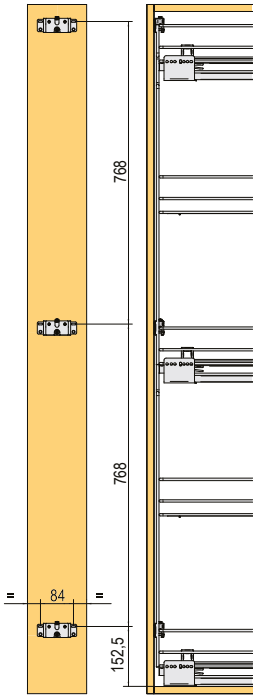

ACCESSORIES

Front holder

code	cabinet body (mm)	colour
346882	150	grey

- additional front holder for two- and multi-door options

side baskets for 150 mm cabinet body

Baskets for 150 mm cabinet body

- concealed full extension slide with damping
- side mounting

Standard side double basket, chrome

code	cabinet body (mm)	width (mm)	depth (mm)	height (mm)	mounting
87100	150	107	473	510	right
87101	150	107	473	510	left
87102	200	157	473	510	right
87103	200	157	473	510	left

- side mounting
- full extension slides with damping

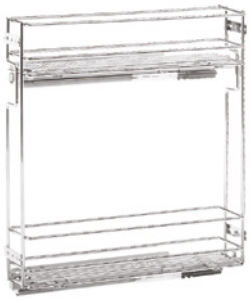

Standard side double basket, plastic containers

code	cabinet body (mm)	width (mm)	depth (mm)	height (mm)	mounting
100265	150	107	473	510	right
100264	150	107	473	510	left

- transparent PVC containers, removable

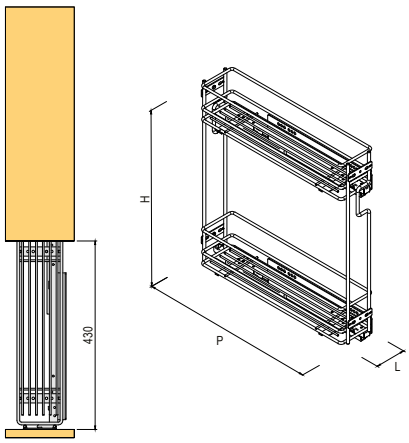

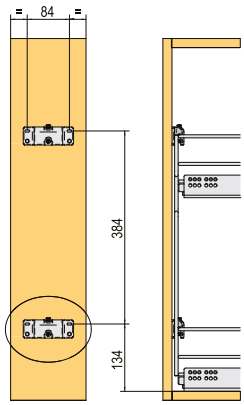

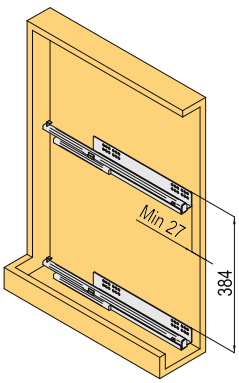

side baskets for 150 mm cabinet body

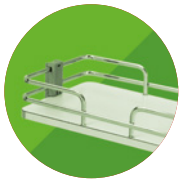

Galaxy side double basket, full base / oval wire

code	cabinet body (mm)	width (mm)	depth (mm)	height (mm)	colour	mounting
306254	150	107	475	531	white/chrome	right
306253	150	107	475	531	white/chrome	left
306256	200	157	475	531	white/chrome	right
306255	200	157	475	531	white/chrome	left
316045	150	107	475	531	anthracite	left
316046	150	107	475	531	anthracite	right
316047	200	157	475	531	anthracite	left
316052	200	157	475	531	anthracite	right

- full base in colour according to the option

Essence side double basket, glass sides

code	cabinet body (mm)	width (mm)	depth (mm)	height (mm)	colour	mounting
284608	150	108	477	511	grey	left

- clear glass 8 mm

top baskets for 150 mm cabinet body

Standard top double basket, chrome

code	cabinet body (mm)	width (mm)	depth (mm)	height (mm)	mounting
100268	150	107	293	510	right
100267	150	107	293	510	left

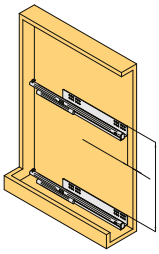

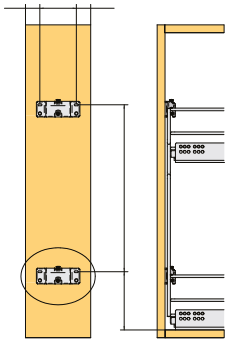

top baskets for 150 mm cabinet body

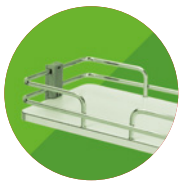

Standard top double basket, plastic containers

code	cabinet body (mm)	width (mm)	depth (mm)	height (mm)	mounting
100270	150	107	293	510	right
100269	150	107	293	510	left

- transparent PVC containers, removable

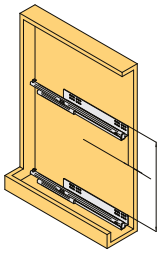

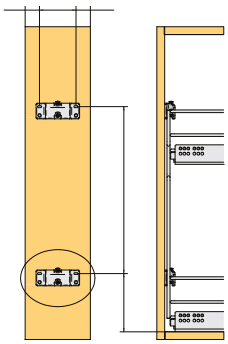

Galaxy top double basket, full base / oval wire

code	cabinet body (mm)	width (mm)	depth (mm)	height (mm)	mounting
306252	150	107	306	531	right
306251	150	107	306	531	left

ACCESSORIES

Partitions for bottles

100266	set of 4 pcs

- increases the stability of stored bottles
- easy mounting and dismounting thanks to PVC clips

bottom baskets

Baskets
for 300–400 mm

- concealed full extension slide with damping
- bottom mounting

Standard bottom double basket, chrome

code	cabinet body (mm)	width (mm)	depth (mm)	height (mm)
87106	300	264	470	520
87107	400	364	470	520
87108	450	414	470	520

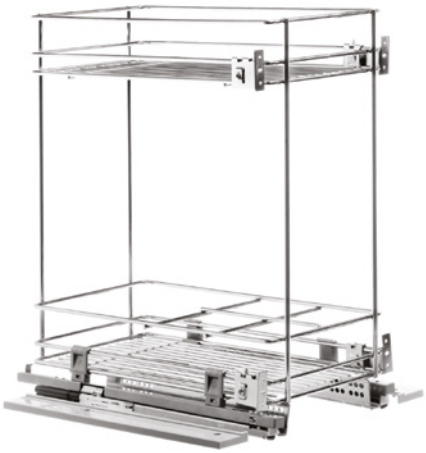

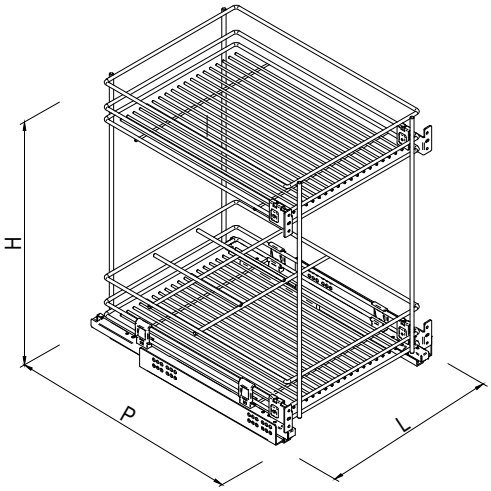

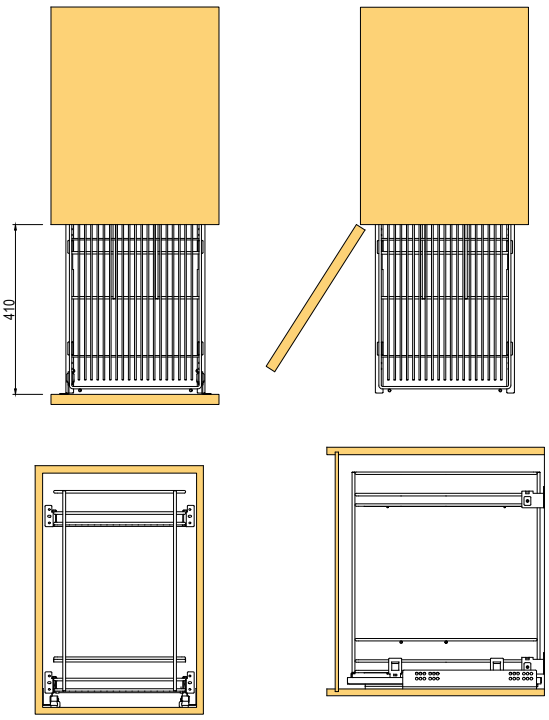

bottom baskets

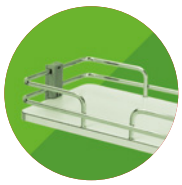

Essence bottom double basket, glass sides

code	cabinet body (mm)	width (mm)	depth (mm)	height (mm)	colour
306263	300	260/268	475	530	grey
306264	400	260/368	475	530	grey

Galaxy bottom double basket, full base / oval wire

code	cabinet body (mm)	width (mm)	depth (mm)	height (mm)	colour
316053	300	264	494	506	anthracite
306257	300	264	494	506	white
306258	400	364	494	506	white

Essence bottom double basket – 306263

Hinge system

Railing arch

code	description
88434	90°

Hooks

code	description
88439	simple

Railing bar

code	guide (mm)	ø (mm)
88430	450	16
88431	600	16
88432	900	16
88433	1200	16

Set contains:
railing bar, 2 × bar holder, 2 end pieces and fixation accessories.

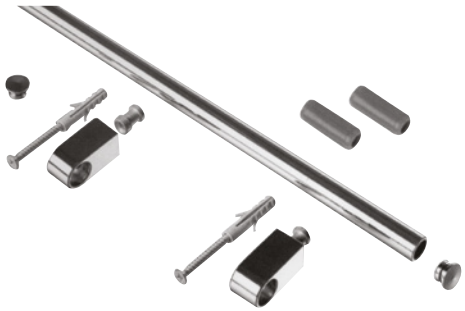

Dish drainer

code	cabinet body (mm)	width (mm)	depth (mm)
306249	600	564	260/367
306250	800	764	260/367

- into the top cabinets
- with depth adjustment
- aluminium frame, chrome wire
- PVC drainer tray

frames, frame attachment under shelves

Wardrobe programme

Pull-out frame with damping slide

code	outer width (mm)	inner width (mm)	depth (mm)	height (mm)
284626	400–480	320–400	513	58
284627	550–620	470–540	513	58
284628	690–760	610–680	513	58
284629	830–900	750–820	513	58
284630	900–970	820–890	513	58

- ball bearing full extension slide with damping
- aluminium and chrome colour
- frames are intended for hanging baskets listed on next pages in the catalogue
- select the most suitable type according to the width of baskets and hangers and inner frame width

Trouser hanger

code	width (mm)	depth (mm)	height (mm)
88505	479	510	103
88575	755	510	103

- for suspension into pull-out frame
- suitable for hanging trousers and skirts

Clothes basket

code	width (mm)	depth (mm)	height (mm)
88566	305	510	151
88528	410	510	151
88529	490	510	151
88530	730	510	151

- for suspension into pull-out frame
- suitable for storing small garments: socks, underwear, etc.

baskets for frames and other inserts

Shoe basket

code	width (mm)	depth (mm)	height (mm)
88531	380	510	200
88536	460	510	200

- wire shelf into an adjustable frame with anti-slip coating
- including holders

PVC container

code	width (mm)	depth (mm)	height (mm)
88533	240	508	85
88534	320	508	85

- transparent plastic for small items

Transparent container

code	width (mm)	depth (mm)	height (mm)
88548	98	440–520	43

- transparent plastic
- for small items
- telescopic

ACCESSORIES

Plastic clips for baskets

code	description
87824P	set of 4 pcs

- spare

Console for frame attachment

code	width (mm)	depth (mm)	height (mm)	colour
87878A	52	335	78	aluminium

- for frame with damping slide
- use if the cabinet body is wider than the maximum possible frame width or when the frame is mounted under the shelf (see the photo)

shoe racks, hangers

Hanger for trousers and skirts

code	width (mm)	depth (mm)	height (mm)
284631	260	500	260

Shoe shelf

code	width (mm)	depth (mm)	height (mm)
284635	275	515	565

- ball bearing full extension slides with self-closing mechanism (without soft closing)
- aluminium/chrome colour
- universal right-left option

Double shelf

code	width (mm)	depth (mm)	height (mm)
284634	275	515	565

- ball bearing full extension slides with self-closing mechanism (without soft closing)
- aluminium/chrome colour
- universal right-left option

Pull-out coat hanger holder

code	width (mm)	depth (mm)	height (mm)
284633	50	500	175

- ball bearing full extension slides with self-closing mechanism (without soft closing)
- aluminium/chrome colour
- universal right-left option

Tie and belt hanger

code	width (mm)	depth (mm)	height (mm)
284632	165	500	50

- ball bearing full extension slides with self-closing mechanism (without soft closing)
- aluminium/chrome colour
- universal right-left option

wardrobe rods and accessories

Wardrobe rod

code	width (mm)	depth (mm)	height (mm)	load capacity (kg)
315969	500–750	168	806	12
315970	750–1250	168	806	12

- pull down wardrobe rail with damping
- grey matt plastic

ACCESSORIES

Spacers

code	Ø (mm)	height (mm)
315971	148	16

- distance 16 mm
- 2 pcs in package

tie, belt and trousers hangers

Pull-out tie and belt hanger

code	colour	width (mm)	min. height (mm)	depth (mm)
JU010	grey	81	81	450

- partial extension slide (nylon rollers)
- max. load capacity 5 kg

Pull-out trousers hanger

code	colour	width (mm)	min. height (mm)	depth (mm)
JU011	grey	215	81	450

- partial extension slide (nylon rollers)
- max. load capacity 5 kg

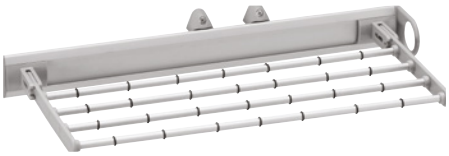

Trouser hanger

code	colour	width (mm)	min. height (mm)	depth (mm)
229402	chrome	375	93	470

- ball bearing full extension slide without damping
- for hanging trousers and skirts

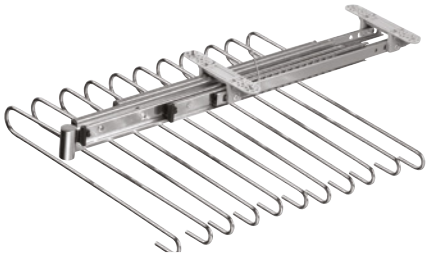

Laundry baskets

code	width (mm)	height (mm)	depth (mm)	colour
36197	440	520	290	white
36198	290	520	290	white
36195	250	450	265	white

36197

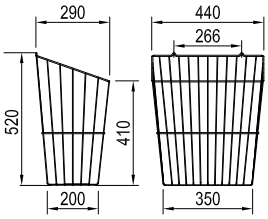

36198

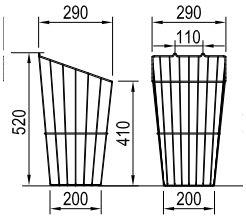

36195

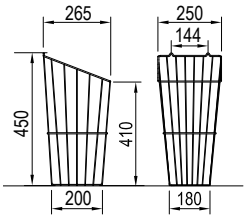

pull-out clothes baskets

N Wire basket in a frame with damping slide

code	dimensions (width × depth × height mm)	cabinet body
399805	564 × 420 × 140	600
399806	664 × 420 × 140	700
399807	764 × 420 × 140	800
399808	864 × 420 × 140	900

N Wicker basket in a frame with damping slide

code	dimensions (width ×depth ×height mm)	cabinet body
399809	564 × 420 × 140	600
399810	664 × 420 × 140	700
399811	764 × 420 × 140	800
399812	864 × 420 × 140	900

tie, belt and trousers hangers

N Insert for jewellery in a frame with damping slide

code	dimensions (width × depth × height mm)	cabinet body
400320	564 × 420 × 61	600
400321	664 × 420 × 61	700
400322	764 × 420 × 61	800
400323	864 × 420 × 61	900

N Trousers hanger in a frame with damping slide

code	dimensions (width × depth × height mm)	cabinet body	number of rails/ rods
400324	564 × 420 × 56	600	7
400325	664 × 420 × 56	700	9
400326	764 × 420 × 56	800	11
400327	864 × 420 × 56	900	13

pull-out shoe rack, pull down wardrobe rail

N Shoe rack in a frame with damping slide

code	dimensions (width ×depth ×height mm)	cabinet body
400328	564 × 420 × 160	600
400329	664 × 420 × 160	700
400330	764 × 420 × 160	800
400331	864 × 420 × 160	900

N Pull down wardrobe rail

code	dimensions (width ×depth ×height mm)	cabinet body
400332	564/764 × 808 × 140	600–800
400333	764/964 × 808 × 140	800–1000

rotating shoe rack, hangers, safe

N Rotating shoe rack

code	dimensions (width × height × depth mm)	number of shelves
400334	718 × (1155–1255) × 360	6
400335	718 × (1425–1525) × 360	8
400336	718 × (1695–1795) × 360	10

N Pull-out hangers

code	dimensions (width × height × depth mm)	use
400337	350 × 145 × 425	trousers
400338	54 × 137 × 425	hangers

N Safe

code	dimensions (width × depth × height mm)	use
400339	400 × 150 × 480	finger print

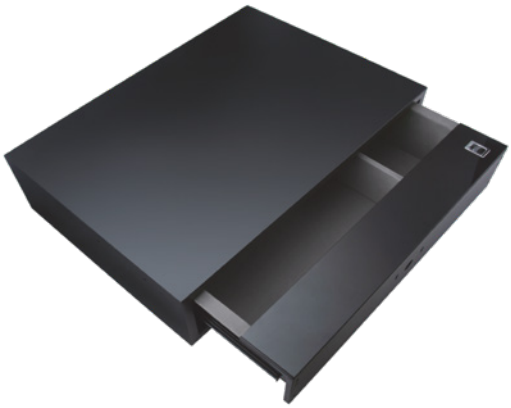

pull-out baskets

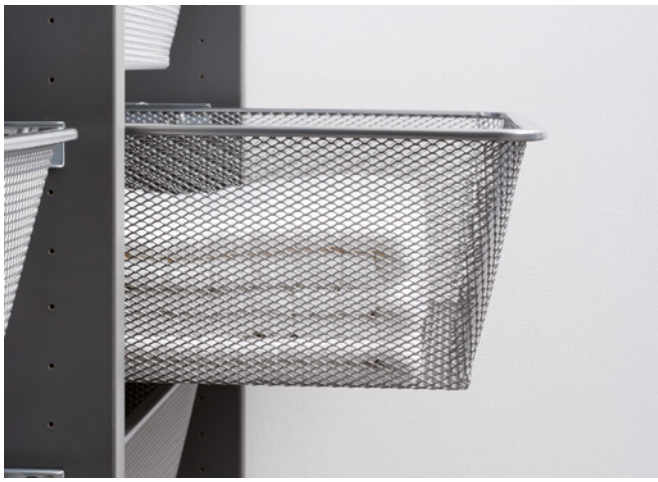

Clothes baskets

Mesh baskets – Flex for plastic Flex slide

code	cabinet body (mm)	width (mm)	depth (mm)	height (mm)	colour
351019	400	336	494	160	white
351020	500	436	494	160	white
351021	600	536	494	160	white
351022	800	736	494	160	white
351023	1000	936	494	160	white
351024	400	336	494	160	anthracite
351025	500	436	494	160	anthracite
351026	600	536	494	160	anthracite
351027	800	736	494	160	anthracite
351028	1000	936	494	160	anthracite

basket shall be supplied with a FLEX slide (code 351098–351102, depending on the colour and thickness of the cabinet body)

Mesh baskets – Roller for roll runner slide Roller

code	cabinet body (mm)	width (mm)	depth (mm)	height (mm)	colour
351034	400	336	494	160	white
351035	500	436	494	160	white
351036	600	536	494	160	white
351037	800	736	494	160	white
351038	1000	936	494	160	white
351039	400	336	494	160	anthracite
351040	500	436	494	160	anthracite
351041	600	536	494	160	anthracite
351042	800	736	494	160	anthracite
351043	1000	936	494	160	anthracite

basket shall be supplied with Roller slides (code 351104–351108, depending on the colour and thickness of the cabinet body)

pull-out baskets

Wire basket – Flex for plastic Flex slide

code	cabinet body (mm)	width (mm)	depth (mm)	height (mm)	colour
351049	400	336	494	85	white
351050	500	436	494	85	white
351051	600	536	494	85	white
351058	400	336	494	175	white
351059	500	436	494	175	white
351060	600	536	494	175	white
351061	800	736	494	175	white
351062	1000	936	494	175	white

❗ basket shall be supplied with a FLEX slide (16 mm – code 351098, 18 mm – code 351101)

Wire basket – Roller for roll runner slide Roller

code	cabinet body (mm)	width (mm)	depth (mm)	height (mm)	colour
351073	400	336	494	85	white
351074	500	436	494	85	white
351075	600	536	494	85	white
351082	400	336	494	175	white
351083	500	436	494	175	white
351085	600	536	494	175	white
351086	800	736	494	175	white
351087	1000	936	494	175	white

❗ basket shall be supplied with a Roller slide (16 mm – code 351104, 18 mm – code 351107)

Plastic slide FLEX

code	cabinet body (mm)	width (mm)	depth (mm)	height (mm)	colour
351098	16	40	338	45	white
351099	16	40	338	45	anthracite
351101	18	40	338	45	white
351102	18	40	338	45	anthracite

Roller roll runner slide

code	cabinet body (mm)	width (mm)	depth (mm)	height (mm)	colour
351104	16	26	472	26	white
351105	16	26	472	26	anthracite
351107	18	26	472	26	white
351108	18	26	472	26	anthracite

Pull down wardrobe rails

code	colour	width (mm)	min. height (mm)	depth (mm)
132226	black/chrome	690–920	880	250
132227	RAL9006/aluminium	690–920		
317509	white	690–920		
JU001	black/chrome	890–1 250		
JU002	RAL9006/aluminium	890–1 250		
317510	white	890–1 250		

- with damping when returning to closed position
- max. load capacity 10 kg
- rail size for inner clearance of the cabinet body

132226

317509

JU002

Pull down wardrobe rails

code	description	load capacity (kg)	dimension (mm)	colour
284646	single arm lift/L	12	415–515	grey/chrome
288109	single arm lift/R			grey/chrome
100730	double arm lift 700	15	750–1150	grey/chrome

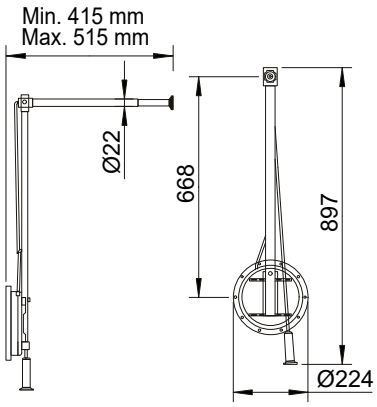

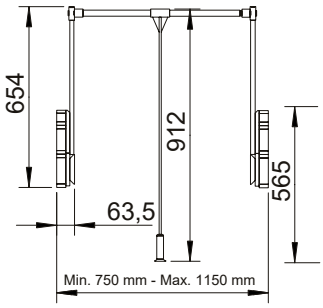

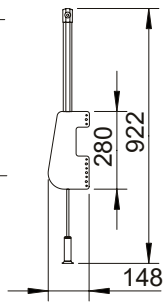

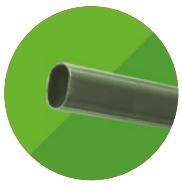

Oval wardrobe rail

code	D (mm)	H (mm)	L (mm)	surface treatment
193150	15	22	2,000	chrome
15512	15	30	3,000	chrome
120405	15	30	2,000	chrome
15500	15	22	3,000	chrome
313755	15	30	2,900	anodised aluminium
352914	15	30	3,000	white

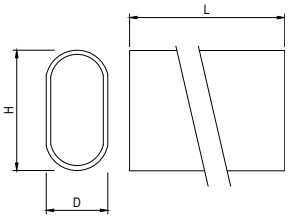

Oval wardrobe rail holder

code	D (mm)	H (mm)	L (mm)	surface treatment	material
15505	15.3	16	32	chrome	zinc
314029	15.3	16	32	chrome	steel
344270	15.3	16	32	silver	zinc

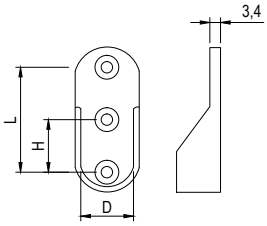

Oval wardrobe rail holder with pins

code	D (mm)	H (mm)	L (mm)	surface treatment
349588	15.2	32	43.6	silver
352928	15.2	32	45	chrome

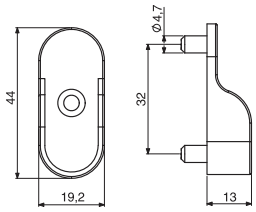

Wardrobe rail holder, shank, centre

code	H (mm)	H1 (mm)	L (mm)	A (mm)	A1 (mm)	A2 (mm)	surface treatment
15541	15,5	20	71	30,5	29	4	chrome

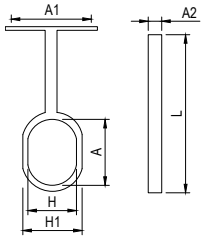

wardrobe rails and accessories

Wardrobe rail holder, shank, end

code	H (mm)	H1 (mm)	L (mm)	A (mm)	A1 (mm)	A2 (mm)	surface treatment
355870	16,5	19,8	70	31,8	35	6	chrome

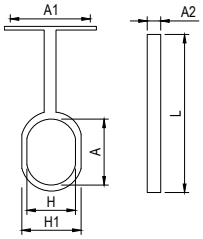

Screw-on wardrobe rail holder under a shelf

code	D (mm)	A (mm)	L (mm)	surface treatment
355869	15	41	64	chrome

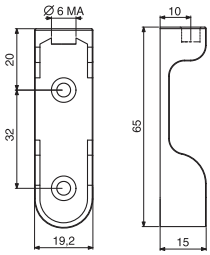

Oval plastic wardrobe rail holder

code	colour
352496	beech
352497	white
352498	brown

Circular wardrobe rail

code	ø (mm)	length (mm)	wall thickness (mm)	surface treatment
284647	25	3,000	1	chrome
15513	25	3,000	0.7	chrome
352913	25	3,000	0.7	white

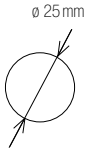

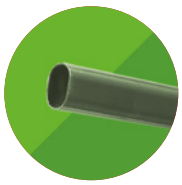

Circular wardrobe rail holder

code	surface treatment	material
15514	chrome	steel
343059	chrome	zinc

- ø 25 mm

Circular wardrobe rail holder – plastic

code	colour
129759	white
129760	brown
129758	black
100185	beech
101199	oak
101202	alder

- ø 25 mm

Pull-out hanger holder

code	length (mm)	height (mm)	width (mm)
284653	300	62	50
284654	350		
284655	400		
284656	450		

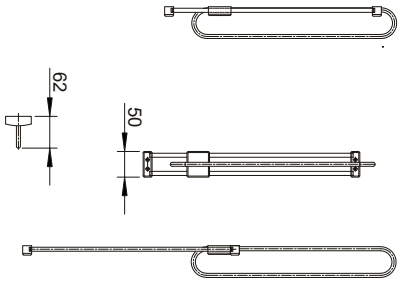

- high-quality solid wire design
- elegant combination of black PVC and chrome
- suitable for expected increased load or higher quality demand

Pull-out wardrobe hanger – nickel surface

code	length (mm)
352003	250
352004	300
352005	350
352006	400
352007	450
352008	500

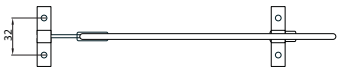

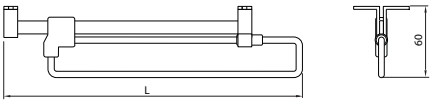

pull down wardrobe rails

DUO LIFT 10

code	Hettich code	description
104355	9079878	connection on both sides

- load capacity 10 kg
- telescopic width adjustment for cabinet body with internal width 750–1170 mm
- installation in System 32
- wardrobe rail made of chrome plated steel
- housing, pivot arm, plastic and steel, aluminium finish

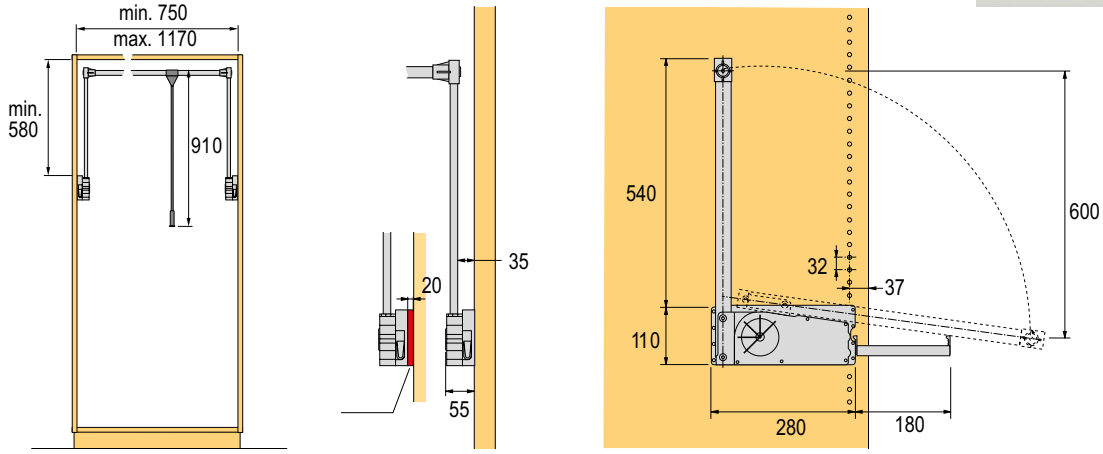

DUO LIFT 18

code	Hettich code	description
119204	9079882	connection on both sides

- load capacity 12–18 kg
- telescopic width adjustment for the internal cabinet body widths of 750–1150 mm
- installation in System 32
- spring force adjustment in 4 stages: 12–14–16–18 kg
- wardrobe rail made of chrome plated steel
- housing, pivot arm, plastic and steel, aluminium finish

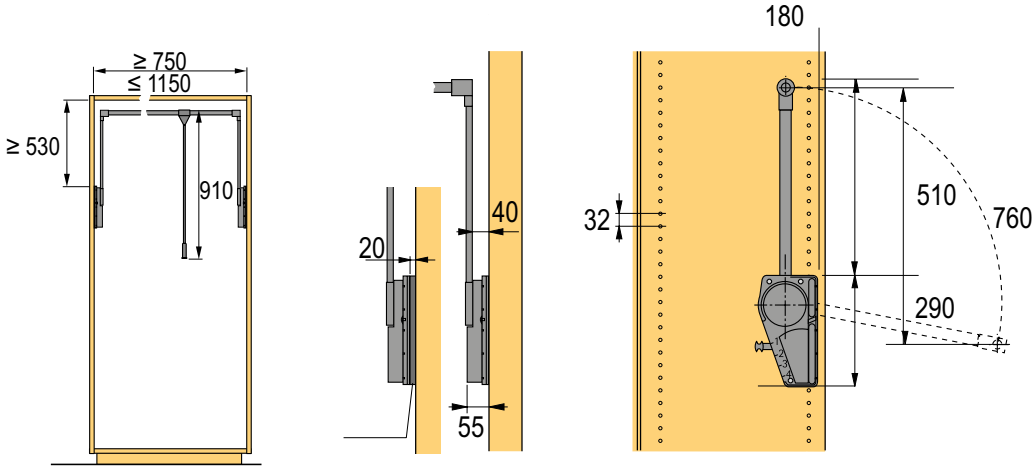

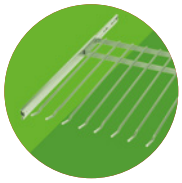

Wardrobe rail

code	Hettich code	length (mm)
107529	47615	2000

- steel, polished chrome

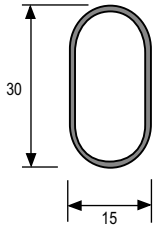

Wardrobe rail

code	Hettich code	length (mm)
107988	9079590	3000

- material thickness 1.2 mm
- anodised aluminium

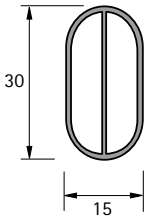

SL 322 wardrobe rod support

code	Hettich code	description
106469	70664	screw-on

- hole pitch 32 mm
- zinc die-cast, nickel plated

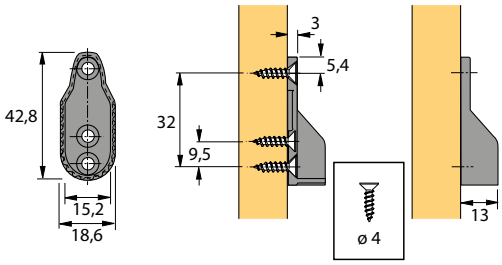

Wardrobe rod length = internal cabinet body width – 7 mm

SL 786 wardrobe rod support

code	Hettich code	description
119133	70668	for screwing on under a shelf

- with special screw M6 × 25
- 2 holes for mounting to the side
- zinc die-cast, nickel plated

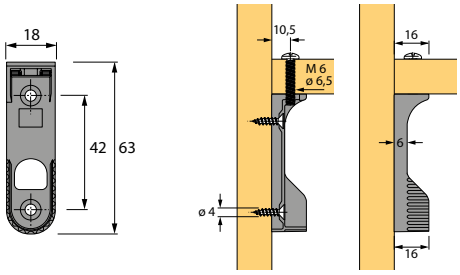

Wardrobe rod length = internal cabinet body width – 13 mm

SL 781 additional wardrobe rod support

code	Hettich code	description
107739	70676	for screwing on under a shelf

- with special screw M6 × 25
- zinc die-cast, nickel plated

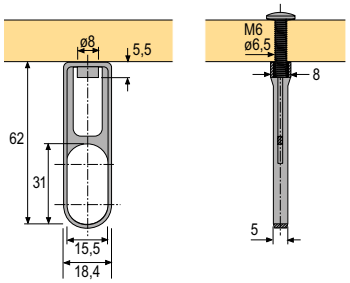

wardrobe rails, pull-out hangers

Tie rack

code	Hettich code	length (mm)
104298	48890	300

- nickel-plated steel

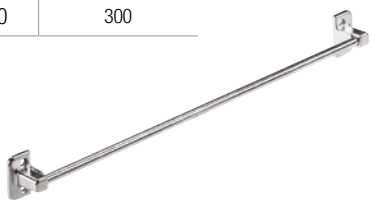

Hanger holder with Quadro slide

code	Hettich code	load capacity (kg)
103999	9136277	25

- for installation under the shelf
- min. cabinet body depth 400 mm
- Quadro slide: steel with silver varnishing
- hanging rail: nickel-plated steel

Pull-out trousers hanger

with mounting between the sides of the cabinet body

Silver

code	Hettich code	width (mm)	depth (mm)	height (mm)	number of trouser holders	cabinet body (mm)
107712	9079960	551	500	37	9	600
153846	9079962	735			13	800
107734	9079963	935			16	1000

With mounting under a shelf

colour – silver powder

code	Hettich code	width (mm)	depth (mm)	height (mm)	number of trouser holders	cabinet body (mm)
209370	9132881	436	500	82	7	500
119195	9079964	556			9	600
153640	9079968	741			13	800
107758	9079971	941			16	1000

The package includes spacers for cabinet bodies with classically opened doors, their number and thickness is listed in the table.

cabinet body sides thickness (mm)	cabinet body (mm)			
	500	600	800	1000
16	2 ×16	2 ×16	4 ×16	4 ×16
18	2 ×12	2 ×12	2 ×16 + 2 ×12	2 ×16 + 2 ×12
19	-	-	2 ×14 + 2 ×12	2 ×14 + 2 ×12

spaceflexx
CLEVER STORAGE